Council Members
District 1: John Thomas
District 2: Ron L. Charlton
District 3: Everett Carolina
District 4: Lillie Jean Johnson
District 5: Austin Beard, *Vice Chairman*
District 6: Steve Goggans
District 7: Johnny Morant, *Chairman*

County Administrator
Sel Hemingway

County Attorney
Wesley P. Bryant

Clerk to Council
Theresa E. Floyd

May 9, 2017 | **5:30 PM** | **County Council Chambers**

GEORGETOWN COUNTY COUNCIL
County Council Chambers, 129 Screven Street, Suite 213, Georgetown, SC 29440

AGENDA

1. **INVOCATION**
2. **PLEDGE OF ALLEGIANCE**
3. **APPROVAL OF AGENDA**
4. **PUBLIC COMMENT**
5. **APPROVAL OF MINUTES**
   - **5.a Regular Council Session - April 25, 2017**
6. **CONSENT AGENDA**
   - **6.a Procurement #16-098, User Fee Comprehensive Engineered Roadway Improvements: FY17**
   - **6.b Procurement #15-080, Maintenance & Rehabilitation of Timber Vehicular Bridges**
   - **6.c Contract #16-043, Change Order 04 (Final) to Murrells Inlet Dredging Project: Parsonage and Main Creeks**
7. **PUBLIC HEARINGS**
   - **7.a Ordinance No. 2017-09 - Authorizing Georgetown County, South Carolina, to Enter Into One or More Amendments or Supplements to the Base Lease and Conveyance Agreement and the Installment Purchase and Use Agreement Each Dated December 1, 2009, and as Heretofore Amended, Between Georgetown County and SCAGO Public Facilities Corporation for Georgetown County, to Approve the Form and Terms of One or More Amendments or Supplements to the Trust Agreement Dated December 1, 2009, as Heretofore Supplemented, Between SCAGO Public Facilities Corporation for Georgetown County and Wells Fargo Bank, N.A. as Trustee, in Connection with the**

Issuance of Certain Installment Purchase Refunding Revenue Bonds (Georgetown County Project), in One or More Series, With Appropriate Series Designations, and to Enter Into a Forward Sale and Delivery, Rate Lock or Term Loan Agreement Related to the Forward Sale and Delivery of Such Bonds; Consenting to the Issuance of Such Installment Purchase Refunding Revenue Bonds in the Aggregate Principal Amount of Not Exceeding $30,000,000; Delegating the Authority to the County Administrator to Approve and Determine Certain Matters; and Other Matters Relating Thereto.

8. APPOINTMENTS TO BOARDS AND COMMISSIONS

8.a Georgetown County Library Board

9. RESOLUTIONS / PROCLAMATIONS

9.a Proclamation No. 2017-06 - Designating May 21-27, 2017 as Emergency Medical Services Week

9.b Resolution No. 2017-07 - Authorizing the Execution of an Agreement and Participation in the Horry County Home Consortium

10. THIRD READING OF ORDINANCES

10.a Ordinance No. 2017-09 - Authorizing Georgetown County, South Carolina, to Enter Into One or More Amendments or Supplements to the Base Lease and Conveyance Agreement and the Installment Purchase and Use Agreement Each Dated December 1, 2009, and as Heretofore Amended, Between Georgetown County and SCAGO Public Facilities Corporation for Georgetown County, to Approve the Form and Terms of One or More Amendments or Supplements to the Trust Agreement Dated December 1, 2009, as Heretofore Supplemented, Between SCAGO Public Facilities Corporation for Georgetown County and Wells Fargo Bank, N.A. as Trustee, in Connection with the Issuance of Certain Installment Purchase Refunding Revenue Bonds (Georgetown County Project), in One or More Series, With Appropriate Series Designations, and to Enter Into a Forward Sale and Delivery, Rate Lock or Term Loan Agreement Related to the Forward Sale and Delivery of Such Bonds; Consenting to the Issuance of Such Installment Purchase Refunding Revenue Bonds in the Aggregate Principal Amount of Not Exceeding $30,000,000; Delegating the Authority to the County Administrator to Approve and Determine Certain Matters; and Other Matters Relating Thereto.

11. SECOND READING OF ORDINANCES

11.a Ordinance No. 2017-11 - An Ordinance to Repeal Ordinance No. 96-08 that created the Georgetown County Coastal Carolina University Advisory Committee

11.b ORDINANCE No. 2017-12 - AN ORDINANCE TO AMEND SECTION 2-80 “Application” OF ORDINANCE NO. 2008-25,

KNOWN AS THE "ORDINANCE TO GOVERN GEORGETOWN COUNTY BOARDS AND COMMISSIONS", TO REMOVE SPECIFIC BOARDS AND COMMISSIONS THAT HAVE BEEN DISSOLVED

11.c Ordinance No. 2017-13 - An Ordinance to declare as surplus a tract of property known as TMS #01-0445-041-00-00 and to authorize the County Administrator to sell the property in the manner as prescribed within Ordinance No. 2008-09, Georgetown County Purchasing Ordinance, as Amended.

12. FIRST READING OF ORDINANCES

12.a Ordinance No. 2017-14 to amend the FY 2016/17 Operating Budget of Georgetown County.

12.b Ordinance No. 2017-15 - An amendment to Article 2, Section 3-10 and Article 4, Section 3-2B of the Georgetown County Land Development Regulation dealing with streets and easements for Minor Subdivisions.

12.c Ordinance No. 2017-16 - An amendment to Article 4, Section 410 of the Georgetown County Zoning Ordinance as it relates to street frontage.

12.d ORDINANCE NO. 2017-17 - AN ORDINANCE TO AMEND ORDINANCE No. 2016-24 TO AUTHORIZE THE LEASE OF HANGARS AND OTHER STORAGE FACILITIES AT THE GEORGETOWN COUNTY (GGE) AND ANDREWS (PHH) AIRPORTS.

13. COUNCIL BRIEFING AND COMMITTEE REPORTS

13.a Land Use & Tourism Committee Report

14. BIDS

15. REPORTS TO COUNCIL

15.a Recognition - Employee of the Quarter

15.b Multi-jurisdictional Program for Public Information Related to the Flood Management Program

15.c FY18 Annual Budget Update

15.d Capital Improvement Plan Update

16. DEFERRED OR PREVIOUSLY SUSPENDED ISSUES

16.a Ordinance No. 2017-10 – An Ordinance to Make Appropriations for Ordinary County Purposes for Georgetown County for the Fiscal Year Beginning July 1, 2017, and Ending June 30, 2018; To Provide for the Expenditure Thereof; and To Provide for Revenues for the Payment Thereof.

17. LEGAL BRIEFING / EXECUTIVE SESSION

17.a Contractual - Property

18. OPEN SESSION

19. ADJOURNMENT

Item Number:	5.a
Meeting Date:	5/9/2017
Item Type:	APPROVAL OF MINUTES

AGENDA REQUEST FORM

GEORGETOWN COUNTY COUNCIL

DEPARTMENT: County Council

ISSUE UNDER CONSIDERATION:
Regular Council Session - April 25, 2017

CURRENT STATUS:
Pending

POINTS TO CONSIDER:
n/a

FINANCIAL IMPACT:
n/a

OPTIONS:
1. Approval of minutes as submitted.
2. Offer amendments.

STAFF RECOMMENDATIONS:
Recommendation for approval of minutes as submitted.

ATTACHMENTS:

Description	Type
DRAFT Minutes - 4/25/17	Cover Memo

Georgetown County Council held a Regular Council Session on Tuesday, April 25, 2017, at 5:30 PM in County Council Chambers located in the old Georgetown County Courthouse, 129 Screven Street, Georgetown, South Carolina.

Present:	Austin Beard	Lillie Jean Johnson
	Everett Carolina	Johnny Morant
	Ron L. Charlton	John Thomas
	Steve Goggans	
Staff:	Sel Hemingway	Wesley P. Bryant
	Theresa E. Floyd	

Other staff members, members of the public, and representatives of the media were also present. In accordance with the Freedom of Information Act, a copy of the agenda was sent to newspapers, television, and radio stations, citizens of the County, Department Heads, and posted on the bulletin board located in the lobby of the historic Courthouse.

Chairman Johnny Morant called the meeting to order. An invocation was given by Councilmember Ron Charlton, and all joined in the pledge of allegiance. Councilmember John Thomas was not in attendance.

APPROVAL OF AGENDA:
A request was made to move Procurement #17-033, Street Resurfacing Project, from the *Consent Agenda* to the *Bids* section of the meeting agenda. Councilmember Ron Charlton moved for approval of the agenda, as amended. Councilmember Austin Beard seconded the motion. Chairman Morant called for discussion, and there was none.

In favor:	Austin Beard	Lillie Jean Johnson
	Everett Carolina	Johnny Morant
	Ron L. Charlton	John Thomas
	Steve Goggans	

PUBLIC COMMENTS:
James Woodbury
Mr. Woodbury, a resident of Andrews for 50 years, stated that up until nine years ago the area ditches were cleaned out on a fairly regular basis. Now the ditches are not maintained and this contributes to the flooding problem. He said the flooding/drainage issues began when the truck bypass was built around Andrews.

Cynthia Timmons
Ms. Timmons addressed County Council regarding the flooding problem in Andrews. She stated that she lives on Hwy 521 outside of Andrews. Although the property is on high ground, and it still flooded. She said she has already lost one house due to flooding. Ms. Timmons said her husband cleaned the ditches around their home before he died six years ago, and now she is asking for help as a County taxpayer.

Mary L. Darby
Ms. Darby, a resident of 130 S. Beech Avenue in Andrews, addressed County Council regarding the flooding problem in Andrews. She said her home has flooded three times, and during the most recent heavy rain/flooding she had to be carried out of the home. She stated that Andrews residents pay taxes too, and asked County Council for help.

Twila Mays
Ms. Mays, a resident of 515 S. Magnolia Avenue in Andrews, stated that she has had to leave her home on three occasions due to flooding. She asked Council to please help the residents of Andrews with this problem.

Beth J. Connelly
Ms. Connelly stated that her property in Andrews has flooded on three occasions in the past 18 months. She has followed the proper protocol in contacting the County Public Works Department about the problem, but the issue has become a "he said, she said" situation being bounced between agencies. She said her family, and other area residents, need to know where to go for help. Ms. Connelly provided photos to County Council of her flooded property.

Jerome Johnson
Mr. Johnson addressed County Council regarding the flooding problem in Andrews. Each time the flooding occurs it is more severe. He said the residents there desperately need help resolving this situation.

Joanne Rogers
Ms. Rogers stated that her husband built their family home in Andrews. Although the home is elevated, the property floods and their air conditioning unit is under water. Water covers the street and doesn't drain quickly. She said they don't know what the solution is to this problem, and asked County Council for help.

Brian McCutcheon
Mr. McCutcheon, a resident of 315 S. Magnolia Street in Andrews, stated that his property has flooded three times. He said the problem is so severe that his children don't want to stay in their own home when it rains because they don't want to wake up with their feet in water. Mr. McCutchen stated that he believes this problem can be resolved, but it will take someone who cares to look into it. He asked County Council for help.

Mike Rufus
Mr. Rufus said the severe flooding problem has been going on in Andrews since October 2015, although this is the first time the problem has been officially brought up before County Council. He said there is no way to know whether speculation regarding flooding being related to construction of the ball park or truck bypass is actually the case, but suggested getting the involvement of a civil engineer to look at the problem beginning with the 1957 drainage charts.

Maurice Cobb
Mr. Cobb stated that he is an Educator at Kensington Elementary School, and recently purchased a home at 702 Poplar Street in Andrews. He said there is nothing more frightening than knowing that every time it rains your property is going to be severely damaged, and the cost that is associated with repair. He said during the most recent flooding incident he was called away from his job, and arrived home to find construction materials floating. He said the area's residents are urgently asking the County for help in correcting this situation.

Thomas Alford
Mr. Alford stated that he has lived in his home at 314 N. Magnolia Street in Andrews for 42 years (the rail road track runs right behind his house). He said the number of people attending this Council meeting from Andrews should be an indicator of how serious the flooding problem is in Andrews. He said certainly the condition of the ditches contributes to the problem, because the water has nowhere to go. Many years ago, the ditches were much better maintained, including the large one adjacent to the railroad tracks.

Thomas Cox Jr.
Mr. Cox stated that he has lived outside of the Andrews City limits on Cedar Street since 1967. He said he has never seen the reoccurrence of flooding that is being experienced now within a 6-7 block area of Andrews. The least amount of rain causes area flooding, which would not be as severe if decent drainage existed. He said the residents would appreciate any help County Council could offer to resolve this problem.

Mayor Frank McClary
Andrews Mayor Frank McClary addressed County Council regarding several matters. He said that he has been back in the area for two years, and experienced three major floods in a period of 18 months. He along with another member of Andrews Town Council met with the County Administrator and Richard Pope (SCDOT) regarding the flooding problem. Although it was a healthy and productive meeting, there is still no plan yet. The Mayor thanked County Councilmember Everett Carolina for coming out to look at the situation. He also thanked County Emergency Preparedness Manager, Sam Hodge, and County Administrator, Sel Hemingway, for the analysis they did to determine where there the flooding problems exist. He said the Town of Andrews is prepared to "come to the table" in getting these problems resolved.

Additionally, Mayor McClary stated that the Town of Andrews had submitted an A-tax application for funding the Good 'Ole Days festival, which was denied. He asked County Council to reconsider this decision. He also said the Town was having problems with stray dogs around and was not getting support from the County Animal Control despite 12% of their property taxes going to the County. Finally, he said the Town residents had voted for the 1% sales tax increase because construction of a new Fire/EMS Complex was included in the projects to be funded. He said that the 1.5 million allotted to this project was not adequate to build 'anything' and questioned if the intent was only to provide "seed" money for the project.

Rev. Tommy Cox
Rev. Cox addressed County Council regarding the flooding problem in Andrews. He said although he lives in the Maryville area of Georgetown, he owns a home in the Town of Andrews. His sister-in-law has lived there for 60 years and never had water come to her door like it has on multiple occasions the over the past 18 months. He said those being affected by this situation are not wealthy people, and there County is the only resort they have for help.

Larry King
Mr. King, a resident of Andrews since 1964, said his church was almost destroyed over a year ago by the flooding. It cost $10,000 to replace the carpet, and once that was done, the flooding happened again. He said the most recent flooding was so severe that the water had waves in it. He pleaded with Council to provide help to correct this situation.

Following the public comments, Chairman Johnny Morant addressed those present regarding the flooding problems in Andrews. He thanked individuals who had taken time to come to the meeting and address County Council on this issue. He said the concerns were heard loud and clear, and County Council was concerned as well, and intended to take immediate action. The Chairman recognized that he issue is not a problem involving only one entity, but a multijurisdictional problem involving the Town of Andrews, the County, and the State. Chairman Morant advised that his intent was to direct the County Administrator to meet with Andrews Mayor, Frank McClary, to develop a plan to address this situation. He requested that periodic reports be provided to County Council regarding the status of this situation every 90 days to ensure that the problem is adequately addressed.

Councilmember Austin Beard questioned if it would be appropriate to request that a status report be is provided to County Council regarding this issue within 30 days. Chairman Morant concurred. Councilmember Everett Carolina reiterated the Chairman's comments that County Council had taken the concerns voiced by Andrews residents to heart, and all efforts would be extended to resolve the problem.

MINUTES:

Regular Council Session – April 11, 2017

Councilmember Ron Charlton moved to approve the minutes of the April 11, 2017 council meeting. Councilmember Steve Goggans seconded the motion. Chairman Morant called for discussion, and no discussion occurred.

In favor:	Austin Beard	Lillie Jean Johnson
	Everett Carolina	Johnny Morant
	Ron L. Charlton	John Thomas
	Steve Goggans	

CONSENT AGENDA:

The following reports were included on the Consent Agenda, and therefore approved previously during the meeting:

Procurement #17-004 Emergency Debris Management and Removal Services – County Council awarded Bid# 17-004, Emergency Debris Management and Removal Services, to D & J Enterprises, Inc. of Auburn, AL with CrowderGulf, LLC of Theodore, AL as an alternate to ensure the County will have coverage in an emergency event.

Procurement #16-014, SOLE Source Steel Aggregate Material for Roads Repair – County Council awarded Purchase Order #2017-00000551, in the amount of $56,934.70, to Stone Construction Company for steel slag aggregate for road repair.

BOARDS AND COMMISSIONS

Board / Commission Appointments – Council District 5

Councilmember Austin Beard moved to appoint/reappoint the following individuals to various County Boards/Commissions:

Alcohol & Drug Abuse Commission – Mr. Victor Lance *(reappointment)*
Building Code Appeals Board – Mr. Marshall Easterling *(reappointment)*
Fire District 1 Board – Mr. Bob Meltzer *(reappointment)*
Library Board - Ms. Elizabeth Connelly *(new appointment)*
Zoning Appeals Board – Mr. Truitt Owens *(reappointment)*

Councilmember Steve Goggans offered a second on the motion. There was no discussion following the motion.

In favor:	Austin Beard	Lillie Jean Johnson
	Everett Carolina	Johnny Morant
	Ron L. Charlton	John Thomas
	Steve Goggans	

Board / Commission Appointment – Council District 6
Councilmember Steve Goggans moved for the appointment of Mr. Thomas Krowka to the Building Code Appeals Board. Councilmember John Thomas seconded the motion. No discussion followed the motion.

In favor:	Austin Beard	Lillie Jean Johnson
	Everett Carolina	Johnny Morant
	Ron L. Charlton	John Thomas
	Steve Goggans	

PROCLAMATIONS / RESOLUTIONS:
Proclamation No. 2017-04
Councilmember Austin Beard moved for the adoption of Proclamation No. 2017-04 proclaiming May 2017 as "Mental Health Month" in Georgetown County. Councilmember Lillie Jean Johnson seconded the motion. Upon a call for discussion from Chairman Johnny Morant, none occurred.

In favor:	Austin Beard	Lillie Jean Johnson
	Everett Carolina	Johnny Morant
	Ron L. Charlton	John Thomas
	Steve Goggans	

A copy of the resolution was presented to Ms. Kisha Guess and Mr. Deborah Heller of the Waccamaw Center for Mental Health.

Proclamation No. 2017-05
Councilmember Lillie Jean Johnson moved to adopt Proclamation No. 2017-05 proclaiming the week of May 21-27, 2017 as "Public Works Week" in Georgetown County. Councilman Everett Carolina offered a second. Chairman Morant called for discussion on the motion, and there was none.

In favor:	Austin Beard	Lillie Jean Johnson
	Everett Carolina	Johnny Morant
	Ron L. Charlton	John Thomas
	Steve Goggans	

ORDINANCES- Third Reading
No reports.

ORDINANCES-Second Reading:
Ordinance No. 2017-09
Councilman Austin Beard moved for second reading approval of Ordinance No. 2017-09, titled "Authorizing Georgetown County, South Carolina, to Enter Into One or More Amendments or Supplements to the Base Lease and Conveyance Agreement and the Installment Purchase and Use Agreement Each Dated December 1, 2009, and as Heretofore Amended, Between Georgetown County and SCAGO Public Facilities Corporation for Georgetown County, to Approve the Form and Terms of One or More Amendments or Supplements to the Trust Agreement Dated December 1, 2009, as Heretofore Supplemented, Between SCAGO Public Facilities Corporation for Georgetown County and Wells Fargo Bank, N.A. as Trustee, in Connection with the Issuance of Certain Installment Purchase Refunding Revenue Bonds (Georgetown County Project), in One or More Series, With Appropriate Series Designations, and to Enter Into a Forward Sale and Delivery, Rate Lock or Term Loan Agreement Related to

the Forward Sale and Delivery of Such Bonds; Consenting to the Issuance of Such Installment Purchase Refunding Revenue Bonds in the Aggregate Principal Amount of Not Exceeding $30,000,000; Delegating the Authority to the County Administrator to Approve and Determine Certain Matters; and Other Matters Relating Thereto". Councilmember Steve Goggans seconded the motion. Chairman Morant called for discussion on the motion, and none occurred.

In favor:	Austin Beard	Lillie Jean Johnson
	Everett Carolina	Johnny Morant
	Ron L. Charlton	John Thomas
	Steve Goggans	

ORDINANCES- First Reading:
Ordinance No. 2017-10 – An Ordinance to Make Appropriations for Ordinary County Purposes for Georgetown County for the Fiscal Year Beginning July 1, 2017, and Ending June 30, 2018; To Provide for the Expenditure Thereof; and To Provide for Revenues for the Payment Thereof.

Ordinance No. 2017-11 – An Ordinance to Repeal Ordinance No. 96-08 that created the Georgetown County Coastal Carolina University Advisory Committee.

Ordinance No. 2017-12 – An Ordinance to Amend Section 2-80, "Application", of Ordinance No. 2008-25, known as the "Ordinance to Govern Georgetown County Boards and Commissions", to Remove Specific Boards and Commissions that have been dissolved.

Ordinance No. 2017-13 – An Ordinance declaring as surplus a tract of property known as TMS #01-0445-041-00-00 and to Authorize the County Administrator to sell the property in the manner as prescribed within Ordinance No. 2008-09, Georgetown County Purchasing Ordinance, as Amended.

BIDS:
Procurement #17-033, Street Resurfacing Project Using CPST Funds
Councilmember Austin Beard moved for approval of the proposed street resurfacing list, as recommended by the SC Department of Transportation, from Capital Project Sales Tax (CPST) revenue in the amount of $5,536,944.13. Councilmember Lillie Jean Johnson seconded the motion. Upon a call for discussion from the Chairman, there was none.

In favor:	Austin Beard	Lillie Jean Johnson
	Everett Carolina	Johnny Morant
	Ron L. Charlton	John Thomas
	Steve Goggans	

REPORTS TO COUNCIL:
Accommodations Tax Award Recommendations
Accommodations Tax Advisory Committee Chairman, Mr. Dana Arneman provided Spring 2017 funding recommendations on behalf of the Committee. Following the presentation, discussion ensued, and Mr. Arneman responded to questions from members of County Council.

Councilmember Austin Beard moved for approval of project funding in the amount of $667,000 as recommended by the Accommodations Tax Committee, and included in a report presented as of this date. Councilman John Thomas seconded the motion. Chairman Morant called for discussion on the motion, and there was none.

In favor:	Austin Beard	Lillie Jean Johnson
	Everett Carolina	Johnny Morant
	Ron L. Charlton	John Thomas
	Steve Goggans	

Chairman Johnny Morant expressed appreciation to Mr. Arneman for the service he has provided to Georgetown County in serving on the Accommodations Tax Advisory Committee for many years, as he had fulfilled his term limits and this would be his final presentation to County Council in this capacity. Councilmember Austin Beard noted that in his role as Chairman of Council's Land Use and Tourism Committee, he has worked very closely with Mr. Arneman over the years. He stated that Mr. Arneman had done a remarkable job in spreading a limited budget as much as possible, while diligently complying with strict State guidelines and oversite from Columbia on how funds are spent. Other members of Council echoed their appreciation as well.

FY18 Annual Budget Update

County Administrator, Sel Hemingway, provided a presentation regarding the FY18 Budget status. Mr. Hemingway noted that information provided to County Council includes preliminary requests that have been received from Department Heads, and Elected Officials. He reviewed the current standing of each of the following budgetary funds: General Fund, Fire District 1, Midway Fire Rescue, Recreation/Aging Services, Law Enforcement, Solid Waste, Stormwater, and Economic Development. He noted that these numbers would change as staff was in the process of reviewing budgets with various Department Heads. Updated numbers will be forth coming for the May 9th budget meeting.

Mr. Hemingway noted that County Council will be presented with a request for a significant increase in the budgetary request from St. Frances Animal Center. This agency has been funded at the same level of $80,000 for the past 10 years. The agency has provided documentation supporting a significant increase in the number of animals handled by the facility over the years. Chairman Morant noted that some members of County Council had participated in a tour of the facility, and prior to that were unaware of the facility's condition. He suggested that Council members that have not visited the site, do so, and offered staff's assistance in making the arrangements if necessary.

EXECUTIVE SESSION:

A motion was made by Councilmember Ron Charlton, and seconded by Councilmember Austin Beard, to move into Executive Session to discussion a legal issue/pending litigation and a contractual/property negotiation matter. There was no discussion on the motion.

In favor:	Austin Beard	Lillie Jean Johnson
	Everett Carolina	Johnny Morant
	Ron L. Charlton	John Thomas
	Steve Goggans	

County Council moved into Executive Session at 7:11 PM.

OPEN SESSION:

Open Session resumed at 8:03 PM. Chairman Morant stated that County Council had discussed two matters during Executive Session, as previously disclosed. He noted that Councilmember Steve Goggans had recused himself, and was not present during discussion on the legal matter. Furthermore, no votes were taken by County Council, nor were any decisions made during Executive Session.

Being no further business to come before County Council, the meeting was adjourned at 8:04 PM.

_____
Date

_____
Clerk to Council

Item Number:	6.a
Meeting Date:	5/9/2017
Item Type:	CONSENT AGENDA

AGENDA REQUEST FORM
GEORGETOWN COUNTY COUNCIL

DEPARTMENT: Purchasing

ISSUE UNDER CONSIDERATION:
Procurement #16-098, User Fee Comprehensive Engineered Roadway Improvements: FY17

CURRENT STATUS:
The Georgetown County Department of Public Works sought competitive bids from South Carolina Department of Transportation approved contractors for User Fee Comprehensive Engineered Roadway Improvements FY17 which included Rambo Lane, Miracle Court and Whispering Pines Drive for a combined length of 1.42 miles, with work scheduled to begin in the second quarter of 2017. The improvements may also include installation of new drainage.

POINTS TO CONSIDER:
This solicitation was advertised in a newspaper of general circulation in Georgetown County and the SC Business Opportunities On-Line Publication, posted on the county website, and a direct postal and e-mail notification was sent to all known offerors. There were three responses received and tabulated at the public bid opening:
1) Coastal Asphalt LLC of Conway, SC;
2) Green Wave Construction of Georgetown, SC; and
3) Stone Construction Company of Andrews, SC.

Name of Firm	Rambo & Miracle, Base Bid	Rambo & Miracle, Special Provisions	Whispering Pines Base Bid	Whispering Pines, Spec Provisions	SUMMARY BID TOTAL	Bid Bond Enclosed
Costal Asphalt, LLC	$782,057.82	$17,820.00	$353,732.00	$7,800.00	$1,161,409.80	Yes
Green Wave Const.	$647,403.50	$15,000.00	$309,289.50	$15,000.00	$986,693.00	Yes
Stone Construction	$540.261.50	$4,800.00	$230,777.25	$2,400.00	$778,238.75	Yes

The "special provision" items include the possibility of mucking end excavating and will be activated if needed.

FINANCIAL IMPACT:
The engineer's estimate for the work, based upon the known quantities was $910,750.33. This item will utilize Local Road User Fees, and is fully funded in 066.906 50702.

OPTIONS:

1) Award to Stone Construction Company of Andrews, SC for a total base bid of $778,238.75, as the lowest offeror for Rambo Lane, Miracle Court, and Whispering Pines Drive;

OR
2) Decline to approve an award.

STAFF RECOMMENDATIONS:
The proposals were reviewed by the Division of Public Services and the Department of Public Works, who found that the proposal submitted by Stone Construction Company of Andrews was in the County's best interest. The County has a satisfactory project history with Stone Construction.

ATTORNEY REVIEW:
No

ATTACHMENTS:

Description	Type
Bid Solication Approval	Backup Material
Public Bid Opening Tabulation	Backup Material
Recommendation from Mr. Funnye	Backup Material
Project Roadway Locations	Backup Material

Georgetown County, South Carolina
PROCUREMENT SOLICITATION APPROVAL
Procurement # 16-098

Procurement for: User Fee Comprehensive Engineered Roadway Improvements: FY17

Department: Public Services, Public Works

Budgeted: ☑ YES ☐ NO

Budgeted/Estimated Cost: $910,750.33 FY 17

Funds Available: ☑ YES ☐ NO ☐ Pending Budget Approval

☑ Cash Purchase

☐ Municipal Lease/Purchase Financing (8 -YR)

Funding Source Location	
G/L Account Number	Funding Amount
066.906 50702	$6,540,369.75

Is grant money involved in this procurement? ☐ YES ☑ NO

If YES, attach a copy of the approved grant budget from the awarding source.

Grant Approval Attached : ☐ YES ☑ NO

Department Director/Elected Official	3/28/17 Date
Purchasing	03-28-2017 Date
Finance Director	3/28/17 Date
County Administrator	3/28/17 Date

Revised 01.08.2013

GEORGETOWN COUNTY
RAMBO LANE AND MIRACLE COURT
D&F Project No.: 031519.08

ITEM NO.	DESCRIPTION	UNIT	QUANTITY	UNIT PRICE	TOTAL PRICE
1031000	MOBILIZATION	LS	NEC	$30,450.00	$30,450.00
1050800	CONSTRUCTION STAKES, LINES & GRADES	EA	1.000	$12,180.00	$12,180.00
1071000	TRAFFIC CONTROL	LS	NEC	$12,180.00	$12,180.00
1090200	AS-BUILT CONSTRUCTION PLANS	LS	1.000	$7,500.00	$7,500.00
2011000	CLEARING & GRUBBING WITHIN RIGHT OF WAY	LS	NEC	$30,450.00	$30,450.00
2031000	UNCLASSIFIED EXCAVATION	CY	3,213.000	$8.00	$25,704.00
2033000	BORROW EXCAVATION	CY	1,271.000	$15.00	$19,065.00
2081001	FINE GRADING	LS	NEC	$23,500.00	$23,500.00
3050108	GRADED AGGREGATE BASE COURSE (8" UNIFORM)	SY	12,350.000	$15.00	$185,250.00
3069900	MAINTENANCE STONE	TON	500.000	$40.00	$20,000.00
3100320	HOT MIX ASPHALT BASE COURSE - TYPE B	TON	30.000	$95.00	$2,850.00
4010005	PRIME COAT	GAL	1,852.500	$6.50	$12,041.25
4011004	LIQUID ASPHALT BINDER PG64-22	TON	76.000	$600.00	$45,600.00
4020330	HOT MIX ASPHALT INTERMEDIATE COURSE TYPE C	TON	15.000	$80.00	$1,200.00
4030340	HOT MIX ASPHALT SURFACE COURSE TYPE C	TON	1,150.000	$75.00	$86,250.00
6051120	PERMANENT CONSTRUCTION SIGNS (GROUND MOUNTED)	SF	224.000	$10.00	$2,240.00
6250025	24" WHITE SOLID LINES (STOP/DIAGONAL LINES)-FAST DRY PAINT	LF	40.000	$5.50	$220.00
6271025	24" WHITE SOLID LINES (STOP/DIAG LINES)-THERMO.-125 MIL	LF	40.000	$45.00	$1,800.00
6510105	FLAT SHEET, TYPE III, FIXED SZ. & MSG. SIGN	SF	18.000	$20.00	$360.00
6531210	U-SECTION POST FOR SIGN SUPPORTS - 3P	LF	28.000	$10.00	$280.00
7141112	15" RC PIPE CUL.-CLASS III	LF	530.000	$25.00	$13,250.00
7141113	18" RC PIPE CUL.-CLASS III	LF	32.000	$30.00	$960.00
7141148	34"X 53" HORIZONTAL ELLIPTICAL(HE) RC PIPE CUL.-CLASS HE-III	LF	40.000	$50.00	$2,000.00
7192020	DROP INLET (24" X 36")	EA	1.000	$3,000.00	$3,000.00
7199100	BEVELING OF PIPE END	EA	10.000	$300.00	$3,000.00
8041020	RIP-RAP (CLASS B)	TON	12.000	$60.00	$720.00
8048215	GEOTEXTILE FOR EROSION CONTROL UNDER RIPRAP(CLASS 2)TYPE D	SY	18.000	$5.00	$90.00
8100001	PERMANENT VEGETATION	MSY	26.793	$725.00	$19,424.76
8103100	TEMPORARY VEGETATION	MSY	26.793	$650.00	$17,415.31
8151110	TEMPORARY EROSION CONTROL BLANKET (ECB)	MSY	5.000	$1,700.00	$8,500.00
8151203	HYDRAULIC EROSION CONTROL PRODUCT (HECP) - TYPE 3	ACRE	11.071	$1,750.00	$19,374.94
8152007	SEDIMENT TUBES FOR DITCH CHECKS	LF	88.000	$12.00	$1,056.00
8153000	SILT FENCE	LF	555.000	$3.00	$1,665.00
				LINE ITEM TOTAL:	$609,576.26
				5% CONTINGENCY:	$30,478.81
				TOTAL:	**$640,055.08**

GEORGETOWN COUNTY
WHISPERING PINES DRIVE
D&F Project No.: 031519.09

ITEM NO.	DESCRIPTION	UNIT	QUANTITY	UNIT PRICE	TOTAL PRICE
1031000	MOBILIZATION	LS	NEC	$12,500.00	$12,500.00
1050800	CONSTRUCTION STAKES, LINES & GRADES	EA	1.000	$5,000.00	$5,000.00
1071000	TRAFFIC CONTROL	LS	NEC	$5,000.00	$5,000.00
1090200	AS-BUILT CONSTRUCTION PLANS	LS	1.000	$7,500.00	$7,500.00
2011000	CLEARING & GRUBBING WITHIN RIGHT OF WAY	LS	NEC	$12,500.00	$12,500.00
2031000	UNCLASSIFIED EXCAVATION	CY	600.000	$8.00	$4,800.00
2033000	BORROW EXCAVATION	CY	1,620.000	$15.00	$24,300.00
2081001	FINE GRADING	LS	NEC	$9,000.00	$9,000.00
3050108	GRADED AGGREGATE BASE COURSE (8" UNIFORM)	SY	4,550.000	$15.00	$68,250.00
3069900	MAINTENANCE STONE	TON	100.000	$40.00	$4,000.00
4010005	PRIME COAT	GAL	682.500	$6.50	$4,436.25
4011004	LIQUID ASPHALT BINDER PG64-22	TON	28.000	$600.00	$16,800.00
4030340	HOT MIX ASPHALT SURFACE COURSE TYPE C	TON	440.000	$75.00	$33,000.00
6051120	PERMANENT CONSTRUCTION SIGNS (GROUND MOUNTED)	SF	176.000	$10.00	$1,760.00
6250025	24" WHITE SOLID LINES (STOP/DIAGONAL LINES)-FAST DRY PAINT	LF	15.000	$5.50	$82.50
6271025	24" WHITE SOLID LINES (STOP/DIAG LINES)-THERMO.-125 MIL	LF	15.000	$45.00	$675.00
6510105	FLAT SHEET, TYPE III, FIXED SZ. & MSG. SIGN	SF	9.000	$20.00	$180.00
6531210	U-SECTION POST FOR SIGN SUPPORTS - 3P	LF	14.000	$10.00	$140.00
7141112	15" RC PIPE CUL.-CLASS III	LF	304.000	$25.00	$7,600.00
7141113	18" RC PIPE CUL.-CLASS III	LF	156.000	$30.00	$4,680.00
7192105	MANHOLE	EA	1.000	$5,000.00	$5,000.00
8041020	RIP-RAP (CLASS B)	TON	40.000	$60.00	$2,400.00
8048215	GEOTEXTILE FOR EROSION CONTROL UNDER RIPRAP(CLASS 2)TYPE D	SY	60.000	$5.00	$300.00
8100001	PERMANENT VEGETATION	MSY	8.379	$725.00	$6,075.10
8103100	TEMPORARY VEGETATION	MSY	8.379	$650.00	$5,446.64
8151110	TEMPORARY EROSION CONTROL BLANKET (ECB)	MSY	2.500	$3,000.00	$7,500.00
8151203	HYDRAULIC EROSION CONTROL PRODUCT (HECP) - TYPE 3	ACRE	3.463	$1,750.00	$6,059.52
8152007	SEDIMENT TUBES FOR DITCH CHECKS	LF	210.000	$12.00	$2,520.00
8153000	SILT FENCE	LF	100.000	$3.00	$300.00
				LINE ITEM TOTAL:	$257,805.00
				5% CONTINGENCY:	$12,890.25
				TOTAL:	**$270,695.25**

Public Bid Opening Tabulation

RFP #16-098, User Fee Comprehensive Engineered Roadway Improvements: FY17

Wednesday, April 19, 2017 at 3:00 PM Eastern NIST

Name of Company	Rambo & Miracle Pg. 20, Line 1-a	Rambo/ & Miracle - Spec Provisions Pg. 20, Line 1-b	Whispering Pines Pg. 20, Line 1-c	Whispering Pines - Spec Provisions Pg. 20, Line 1-d	SUMMARY BID TOTAL Pg. 20, Line 1-e	Comment(s)
Coastal Asphalt, LLC	$ 782,057.82	$ 17,820.00	$ 353,732.00 ~~353,372.00~~	$ 7,800.00	$ 1,161,409.80	BB-Yes
Green Wave Construction	$ 647,403.50	$ 15,000.00	$ 309,289.50	$ 15,000.00	$ 986,693.00	BB Yes
Stone Construction	$ 540,261.50	$ 4,800.00	$ 230,777.25	$ 2,400.00	$ 778,238.75	BB Yes
	$	$	$	$	$	
	$	$	$	$	$	
	$	$	$	$	$	
	$	$	$	$	$	

OPENED BY: [signature]

WITNESS: Ann G. Puckett

Georgetown County
Department of Public Works
Phone: (843) 545-3436
Fax: (843) 545- 3486

Memorandum

To: Kyle Prufer

From: Ray Funnye, Director

Date: April 28, 2017

File No: 316.16

Re: Bid Recommendation - Bid # 16-098 User Fee Comprehensive Engineered Roadway Improvements : FY17

On Wednesday April 19, 2017, Georgetown County received three (3) bids for Bid Package #16-098 - User Fee Comprehensive Engineered Roadway Improvements: FY17. Of the three (3) respondents, all were found to be complete bid packages responding to all items.

The lowest bid was from Stone Construction Co.,LLC of Andrews, SC with a total bid of $778,238.75.

Based upon the aforementioned, I recommend awarding Bid #16-098 - User Fee Comprehensive Engineered Roadway Improvements: FY17 to Stone Construction Co., LLC of Andrews, SC a total amount of $778,238.75.

SECTION 00200 – Segment Locations

Whispering Pines Drive	Length (Miles)	Segment Description:
	0.272	Choppee Road to terminus
Off Choppee Road, NW from US-701 North (a/k/a/ N Fraser Street), in the Peters Creek community.		

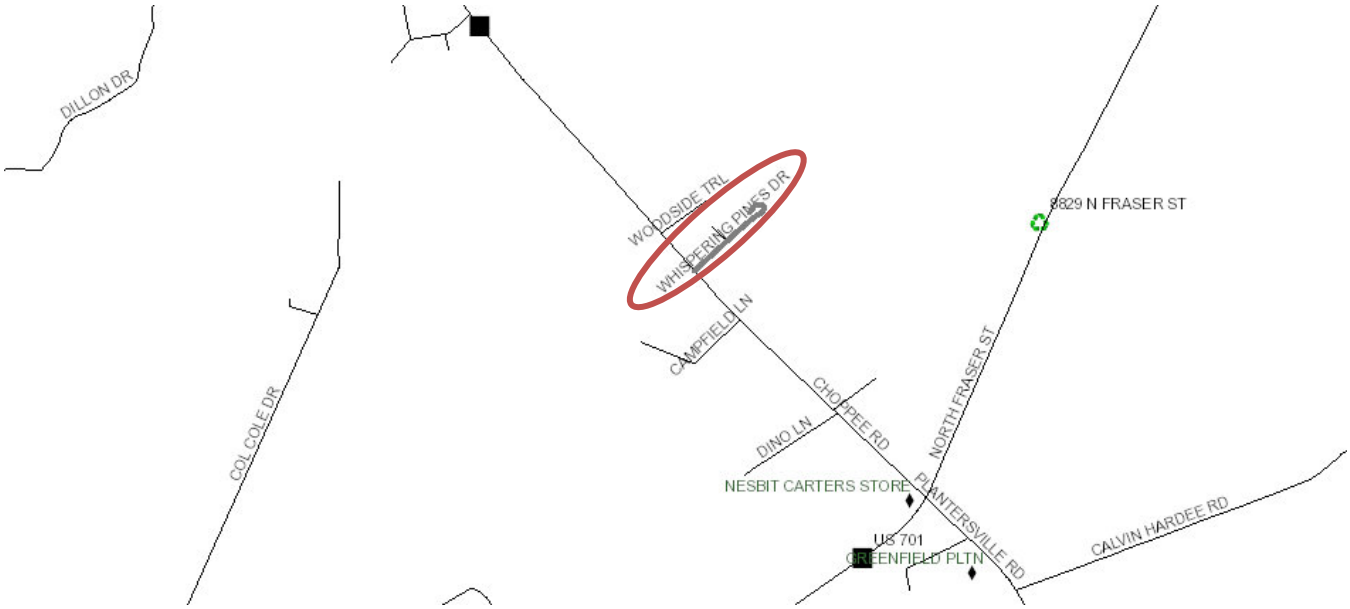

Whispering Pines Drive

Rambo Ln & Miracle Ct	Length (Miles)	Segment Description:
	0.782	
Rambo Ln is off Kent Rd (a/k/a County S-22-22), north of Georgetown Hwy (a/k/a US-521) in the Kent community, and runs into Miracle Ct.		

Rambo Lane

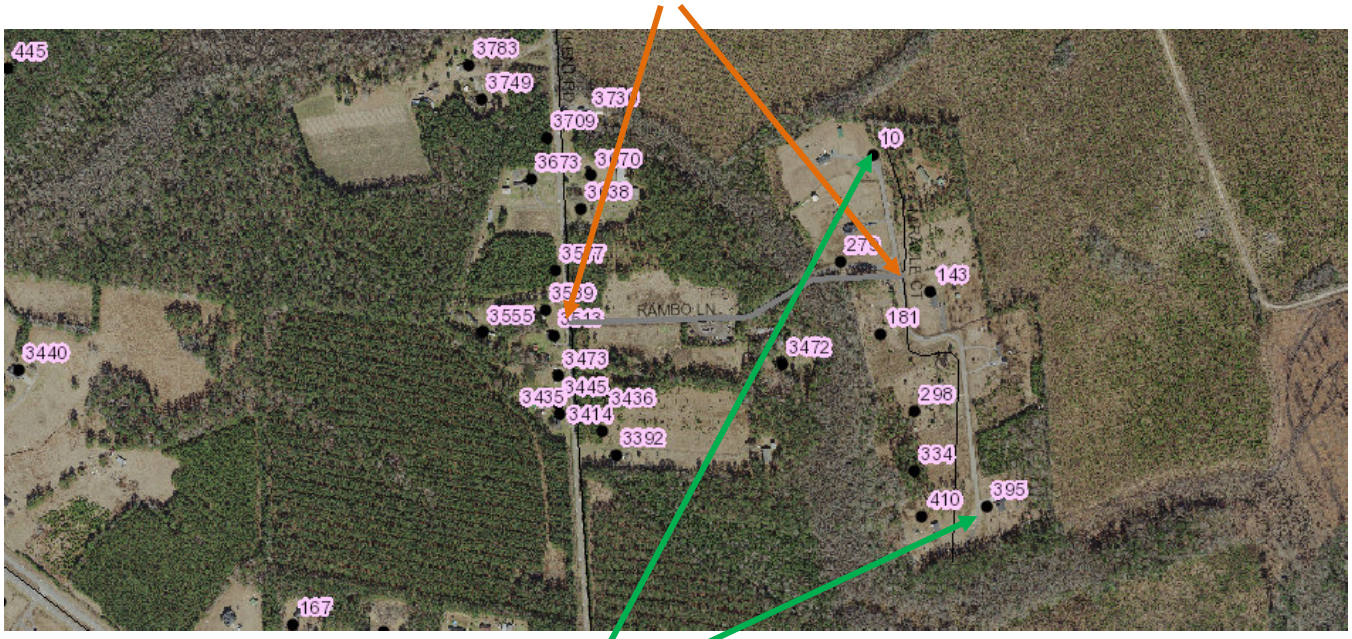

Miracle Court

Item Number:	6.b
Meeting Date:	5/9/2017
Item Type:	CONSENT AGENDA

AGENDA REQUEST FORM
GEORGETOWN COUNTY COUNCIL

DEPARTMENT: Purchasing

ISSUE UNDER CONSIDERATION:
Procurement #15-080, Maintenance & Rehabilitation of Timber Vehicular Bridges

CURRENT STATUS:
The County solicited a Request for Proposal (RFP) for timber bridge maintenance and rehabilitation services to prolong the usable life of four (4) timber vehicular bridges. These are located on Gilman Road and Parish Road in the Summergate Development a/k/a "The Bridges of Litchfield" in the Pawleys Island Community in the Waccamaw Neck area of the county. The use of County Transportation Committee (CTC) Funds in the performance of this project will dictate that regulations and procedures regarding the use of state and federal highway funds are to be observed.

POINTS TO CONSIDER:
This solicitation was advertised in a newspaper of general circulation in Georgetown County and the SC Business Opportunities On-Line Publication, posted on the county website, and a direct postal and e-mail notification was sent to all known offerors. There were two (2) responses received and tabulated:

1) Backwoods Bridges LLC of Freeport, FL at $224,647.00 base bid; and
2) Greenwall Construction Services, Inc. or Myrtle Beach, SC at $291,771.65 base bid.

BACKWOODS BRIDGES	Base Bid Only	Alternate #1	Alternate #2	Base Bid w/ Alt 1
Bridge 2 (26'W x 160'L)	$ 103,720.00	$ (560.00)	[No Bid]	$ 103,160.00
Bridge 3 (26'W x 75'L)	$ 48,059.50	$ (234.50)	[No Bid]	$ 47,825.00
Bridge 1 (26'W x 70'L)	$ 44,135.00	$ (245.00)	[No Bid]	$ 43,890.00
Bridge 4 (26'W x 45'L)	$ 28,732.50	$ (147.50)	[No Bid]	$ 28,585.00
Total	**$ 224,647.00**	**$ (1,187.00)**	**$ -**	**$ 223,460.00**

GREENWALL CONSTRUCTION	Base Bid Only	Alternate #1	Alternate #2	Base Bid w/ Alt 1
Bridge 2 (26'W x 160'L)	$ 110,864.00	$ (1,500.80)	$ 28,412.80	$ 109,363.20
Bridge 3 (26'W x 75'L)	$ 67,394.25	$ (659.28)	$ 13,284.35	$ 66,734.97
Bridge 1 (26'W x 70'L)	$ 69,287.40	$ (688.80)	$ 12,430.60	$ 68,598.60
Bridge 4 (26'W x 45'L)	$ 44,226.00	$ (443.25)	$ 7,991.10	$ 43,782.75
Total	**$ 291,771.65**	**$ (3,292.13)**	**$ 62,118.85**	**$ 288,479.52**

Alternate 1 is a deduction from the base bid which would eliminate the planned replacement of 2x2 wooden balusters and use a black vinyl chain link in lieu.

Alternate 2 is the additional cost to include an epoxy coating on the new wear deck (bridge

surface), later determined by the project engineer as unnecessary.

FINANCIAL IMPACT:
This project will use CTC (County Transportation Committee) funds through a grant provided by SC-DOT (CTC Pin #P029414). The engineer's original project estimate was $263,000.00. This project is fully funded in G/L 420.901 50702.

OPTIONS:
1) Award to the low bid offeror Backwoods Bridges, LLC of Freeport FL to include the base bid at a cost of $224,647.00 and Alternate 1, a deduct of <$1,187.00> to utilize a black vinyl coated chain link divider, for a total award of $223,460.00; OR

2) Decline to make an award.

STAFF RECOMMENDATIONS:
Proposals were reviewed by Public Services Division, Public Works Department and the County's consulting transportation engineer who determined that the base bid scope of services combined with the option of Alternate 1 for the vinyl steel dividers, would be in the County's best interest. The alternate epoxy deck treatment is not needed.

ATTORNEY REVIEW:
No

ATTACHMENTS:

Description	Type
Bid Solicitation Approval	Backup Material
Project Location Aerial Photos	Backup Material
Engineer's Project Notes and Drawings	Backup Material
Public Bid Opening Tabulation	Backup Material
Bid Tabulation Review Worksheet	Backup Material
Recommendation from Mr. Funnye	Backup Material

Georgetown County, South Carolina
PROCUREMENT SOLICITATION APPROVAL
Procurement # 15-080

Procurement for: Maintenance and Rehabilitation of Timber Vehicular Bridges

Department: Public Services, Public Works

Budgeted: ☐ YES ☑ NO

Budgeted/Estimated Cost: $263,000.00 FY 17

Funds Available: ☑ YES ☐ NO ☐ Pending Budget Approval

☑ Cash Purchase

☐ Municipal Lease/Purchase Financing (8 -YR)

Funding Source Location	
G/L Account Number	Funding Amount
420.901-~~7~~5 0702	$1,711,419.50
CTC Pin #P029414	

Is grant money involved in this procurement? ☐ YES ☑ NO

If YES, attach a copy of the approved grant budget from the awarding source.

Grant Approval Attached : ☐ YES ☑ NO

Department Director/Elected Official	02/14/2017 Date
Purchasing	02-14-2017 Date
Finance Director	2/15/17 Date
County Administrator	2/16/17 Date

Revised 01.08.2013

Laydown Area

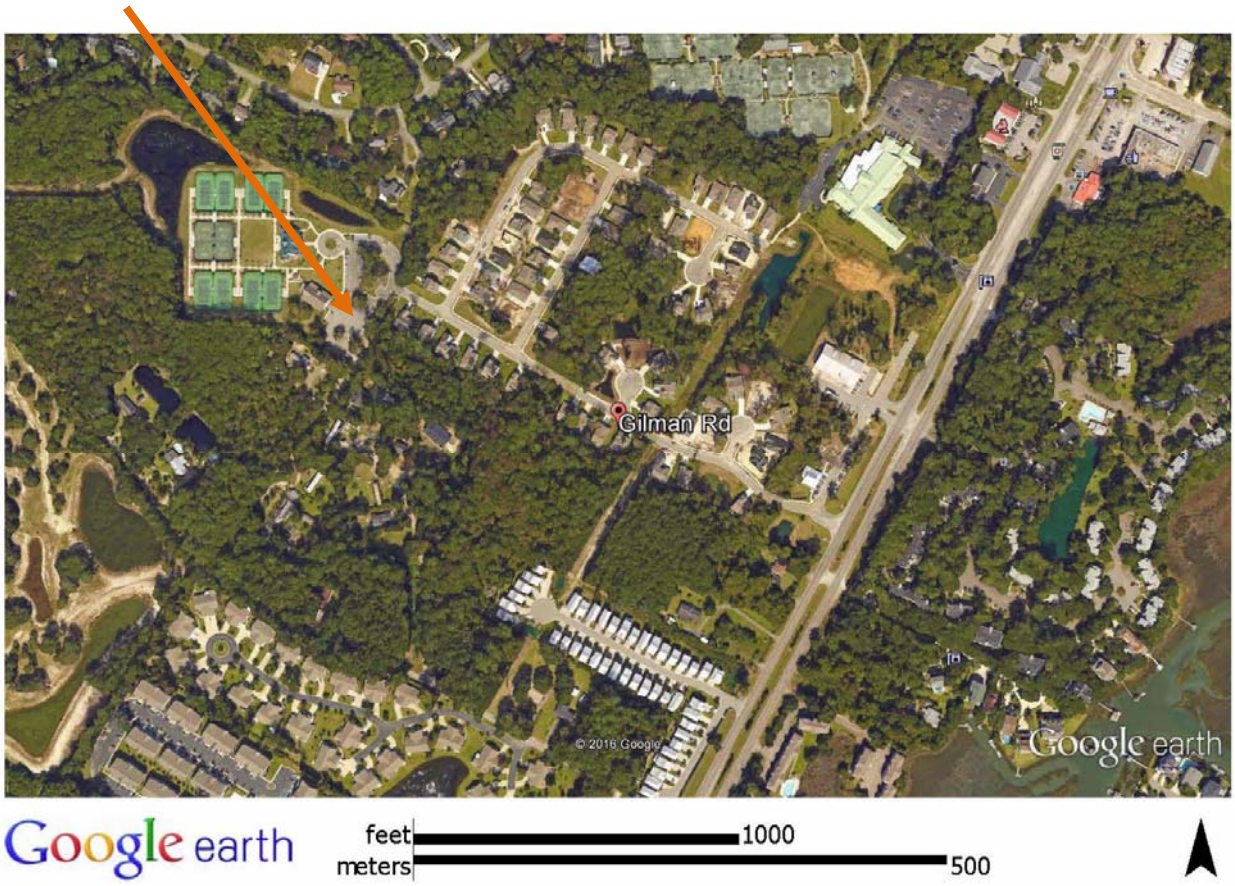

[The remainder of this page intentionally left blank.]

Approximate Bridge Locations: Gilman and Parish Roads

Gilman Road above.

Parish Road below.

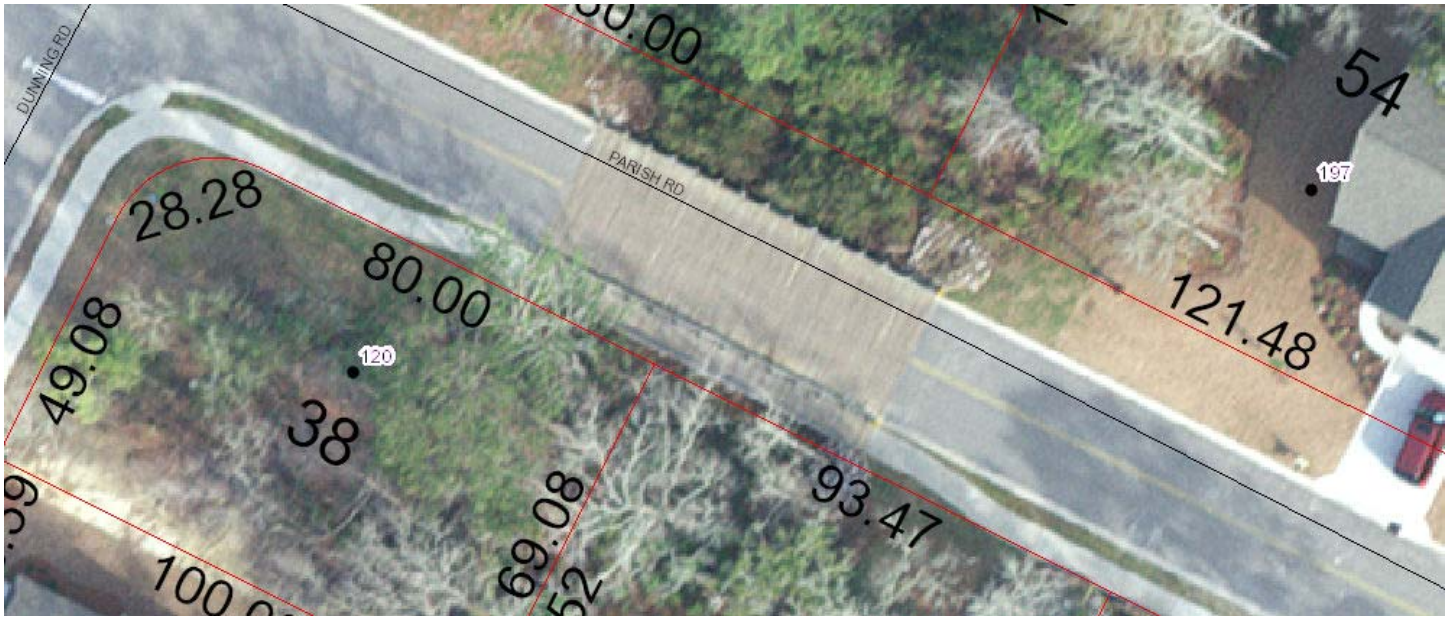

GENERAL NOTES

1. CONSTRUCTION SHALL BE IN ACCORDANCE WITH THE INTERNATIONAL BUILDING CODE, 2015 EDITION AND AASHTO BRIDGE SPECIFICATION 2014.
2. THE CONTRACTOR SHALL VERIFY ALL DIMENSIONS AND CONDITIONS PRIOR TO PROCEEDING WITH THE WORK. THE ENGINEER SHALL BE NOTIFIED IMMEDIATELY IN WRITING OF ANY DISCREPANCIES.
3. SITE SAFETY AND THE MEANS, METHODS AND SEQUENCING OF CONSTRUCTION OPERATIONS ARE THE SOLE RESPONSIBILITY OF THE GENERAL CONTRACTOR.
4. THE CONTRACTOR IS SOLELY RESPONSIBLE FOR THE DESIGN AND ERECTION OF TEMPORARY BRACING AND SHORING AS REQUIRED FOR STABILITY OF THE STRUCTURE DURING ALL PHASES OF CONSTRUCTION.
5. THESE DRAWINGS SHALL BE USED IN CONJUNCTION WITH THE EXISTING BRIDGE CONSTRUCTION DRAWINGS. THE CONTRACTOR SHALL BE RESPONSIBLE FOR CHECKING AND COORDINATING DIMENSIONS, CLEARANCES, TIMBER SIZES, ETC. WITH THE THE EXISTING BRIDGE DRAWINGS IN CASE OF CONFLICT, CONTACT ENGINEER.
6. WORK NOT INDICATED AS PART OF THE DRAWINGS BUT REASONABLY IMPLIED TO BE SIMILAR TO THAT AT CORRESPONDING PLACES SHALL BE REPEATED.
7. ALL SECTIONS AND DETAILS ARE TYPICAL AT SIMILAR LOCATIONS AND WHERE APPLICABLE.
8. DRESSED LUMBER: S4S, 19% MAXIMUM MOISTURE CONTENT FOR 2 INCH THICKNESS OR LESS, MARKED WITH GRADE STAMP OF INSPECTION AGENCY.
9. ALL FRAMING AND DECK MEMBERS SHALL BE SOUTHERN YELLOW PINE GRADE NO. 1 DENSE.
10. MISCELLANEOUS LUMBER: NO. 2 SOUTHERN YELLOW PINE FOR NAILERS, BLOCKING AND SIMILAR MEMBERS.
11. FIT ROUGH CARPENTRY TO OTHER CONSTRUCTION; SCRIBE AND COPE FOR ACCURATE FIT. CORRELATE LOCATION OF FURRING, BLOCKING AND SIMILAR SUPPORTS TO ALLOW ATTACHMENT OF OTHER CONSTRUCTION.
12. WOOD SHALL BE TREATED IN ACCORDANCE WITH AWPA STANDARD U1 REQUIREMENTS TO THE APPROPRIATE USE CATEGORIES SHOWN IN THE CHART BELOW. AFTER TREATMENT, KILN DRY LUMBER TO 19% AND 15% MOISTURE CONTENT.
13. WOOD BOLTS AND FASTENERS SHALL BE HOT–DIP GALVANIZED, UNLESS NOTED OTHERWISE.
14. CONTRACTOR TO INSPECT RAILING AND CURB BOLTS AND TIGHTEN LOOSE CONNECTIONS AS REQUIRED.
15. CONTRACTOR IS RESPONSIBLE FOR PROPERLY REMOVING DEMOLISHED MATERIALS FROM SITE.
16. CONTRACTOR SHALL PROVIDE ALL MATERIALS, LABOR, TRANSPORTATION, AND EQUIPMENT TO COMPLETE THE PROJECT.

USE CATEGORY & TREATMENT	CORROSION CLASSIFICATION	FASTENER COATING RECOMMENDATION
UC4A GROUND CONTACT CA–B 0.21 (PEDESTRIAN GUARD RAIL)	MEDIUM CORROSION (FROM TREATMENT)	HOT DIPPED GALVANIZED
UC4B GROUND CONTACT HEAVY DUTY CA–B 0.31 (WEAR DECK, VEHICULAR GUARD RAIL AND CURB)	SEVERE CORROSION (FROM TREATMENT)	316 S.S.

REMOVE/REPLACE VEHICULAR GUARDRAIL AND CURB

1. CONTRACTOR IS RESPONSIBLE FOR VISUALLY INSPECTING VEHICULAR GUARDRAIL AND CURB FOR MAJOR DEFECTS SUCH AS BUT NOT LIMITED TO CRACKS, WARPING, SPLITTING, OR CHECKING.
2. MEMBERS WITH MAJOR DEFECTS SHALL BE REMOVED AND REPLACED WITH NEW MEMBER.
3. CONTRACTOR TO REFERENCE EXISTING BRIDGE DRAWINGS FOR GUARDRAIL/CURB MEMBER SIZES AND CONNECTION REQUIREMENTS.
4. SEE CHART ON THIS DRAWING FOR ESTIMATED GUARDRAIL/CURB MEMBER QUANTITIES.

REMOVE/REPLACE 42" PEDESTRIAN GAURDRAIL

1. CONTRACTOR TO REMOVE AND REPLACE PEDESTRIAN GAURDRAIL. EXISTING GUARDRAIL POSTS ARE NOT TO BE REMOVED AND SHALL BE REUSED.
2. NEW GUARDRAIL SHALL BE INSTALLED PER DETAIL SHOWN ON S–101.
3. SEE CHART ON THIS DRAWING FOR GUARDRAIL QUANTITIES.

WOOD COATING

1. OWNER SHALL HAVE CHOICE OF THE TYPE AND COLOR OF ONE OF THE FOLLOWING WOOD COATING SYSTEMS OR APPROVED EQUAL:
   A) BENJAMIN MOORE ARBORCOAT WATERBORNE EXTERIOR STAIN SOLID COLOR 640
   B) BENJAMIN MOORE ARBORCOAT WATERBORNE EXTERIOR STAIN TRANSLUCENT 623
2. WOOD COATING SHALL BE APPLIED TO EXPOSED WOOD SURFACES AT AND ABOVE THE BRIDGE DECK.
3. CONTRACTOR SHALL INSTALL COATING PER MANUFACTURER'S INSTRUCTIONS.
4. SEE CHART ON THIS DRAWING FOR ESTIMATED COATING QUANTITIES. CONTRACTOR SHALL CONSIDER AREA OF VEHICULAR GUARDRAIL, CURB, AND PEDESTRIAN GAURDRAIL REFERENCING EXISTING BRIDGE DRAWINGS.

VEHICULAR WEAR DECK

1. ADD BRIDGE WEAR DECK SURFACE CONSISTING OF 2X6 TREATED LUMBER. 2X8 TREATED LUMBER MAY BE USED AT CONTRACTORS OPTION.
2. 2X MEMBERS SHALL SPAN PARALLEL TO THE BRIDGE LENGTH AND SHALL BE INSTALLED BARK SIDE UP.
3. CONTRACTOR IS RESPONSIBLE FOR THE REMOVAL OF ITEMS PROTRUDING OUT OF THE EXISTING BRIDGE DECK THAT WOULD PREVENT THE 2X MEMBERS FROM LAYING COMPLETELY FLAT. THIS IS TO INCLUDE BUT NOT LIMITED TO SCREWS, WOOD CHECKING, SPLINTERING, DIRT, ETC.
4. WEAR DECK SHALL BE INSTALLED USING #10x3 $\frac{1}{2}$" STAINLESS STEEL SCREWS. SCREWS SHALL BE PLACED IN GROUPS OF TWO SPACED MAX. 2'–0" O/C ALONG THE LENGTH OF THE MEMBER.
5. WEAR DECK MEMBERS AT BRIDGE ENDS SHALL BE CUT AT 60 DEGREE ANGLE TO PREVENT A HARD TRANSITION BETWEEN ASPHALT PAVING AND WOOD BRIDGE DECK. IF OWNER ELECTS TO PROVIDE NEW ASPHALT TIE–INS AT THE BRIDGE ENDS UNDER SEPARATE CONTRACT, 60 DEGREE BEVELS SHALL BE DELETED.
6. SEE CHART ON THIS DRAWING FOR ESTIMATED WEAR DECK QUANTITIES.

EPOXY COATING ON WEAR DECK (BID ALTERNATE 2)

1. EPOXY AGGREGATE COATING SHALL BE APPLIED OVER BRIDGE VEHICULAR WEAR DECK. EPOXY COATING SHALL BE SIKADUR 22 LO–MOD FS OR APPROVED EQUIVALENT. SMALL AGGREGATE SIMILAR TO FLINT STONE PROVIDED BY FLINT ROCK PRODUCTS SHALL BE SEEDED INTO THE EPOXY COATING DURING APPLICATION.
2. CONTRACTOR SHALL INSTALL COATING PER MANUFACTURER'S INSTRUCTIONS.
3. SEE CHART ON THIS DRAWING FOR ESTIMATED EPOXY COATING QUANTITIES.

BRIDGE REPAIR QUANTITIES CHART

BRIDGE 1			
BRIDGE AREA	ITEM	UNITS	QUANTITY
VEHICULAR	ADD 2X6 WEAR DECK	SF	4160
VEHICULAR	REMOVE AND REPLACE GUARDRAIL (6x10)	LF	275
VEHICULAR	REMOVE AND REPLACE CURB (6x10)	LF	275
VEHICULAR	WOOD COATING GUARDRAIL/CURB	LF	320
VEHICULAR/PEDESTRIAN	WOOD COATING BRIDGE DECK	SF	5120
PEDESTRIAN	WOOD COATING GUARDRAIL	LF	160
PEDESTRIAN	REMOVE AND REPLACE 42" GUARDRAIL	LF	160
VEHICULAR	EPOXY COATING ON WEAR DECK (ALT. 2)	SF	4160
BRIDGE 2			
BRIDGE AREA	ITEM	UNITS	QUANTITY
VEHICULAR	ADD 2X6 WEAR DECK	SF	1945
VEHICULAR	REMOVE AND REPLACE GUARDRAIL (6x10)	LF	130
VEHICULAR	REMOVE AND REPLACE CURB (6x10)	LF	130
VEHICULAR	WOOD COATING GUARDRAIL/CURB	LF	150
VEHICULAR/PEDESTRIAN	WOOD COATING BRIDGE DECK	SF	2350
PEDESTRIAN	WOOD COATING GUARDRAIL	LF	67
PEDESTRIAN	REMOVE AND REPLACE 42" GUARDRAIL	LF	67
VEHICULAR	EPOXY COATING ON WEAR DECK (ALT. 2)	SF	1945
BRIDGE 3			
BRIDGE AREA	ITEM	UNITS	QUANTITY
VEHICULAR	ADD 2X6 WEAR DECK	SF	1820
VEHICULAR	REMOVE AND REPLACE GUARDRAIL (6x10)	LF	120
VEHICULAR	REMOVE AND REPLACE CURB (6x10)	LF	120
VEHICULAR	WOOD COATING GUARDRAIL/CURB	LF	140
VEHICULAR/PEDESTRIAN	WOOD COATING BRIDGE DECK	SF	2240
PEDESTRIAN	WOOD COATING GUARDRAIL	LF	70
PEDESTRIAN	REMOVE AND REPLACE 42" GUARDRAIL	LF	70
VEHICULAR	EPOXY COATING ON WEAR DECK (ALT. 2)	SF	1820
BRIDGE 4			
BRIDGE AREA	ITEM	UNITS	QUANTITY
VEHICULAR	ADD 2X6 WEAR DECK	SF	1170
VEHICULAR	REMOVE AND REPLACE GUARDRAIL (6x10)	LF	80
VEHICULAR	REMOVE AND REPLACE CURB (6x10)	LF	80
VEHICULAR	WOOD COATING GUARDRAIL/CURB	LF	90
VEHICULAR/PEDESTRIAN	WOOD COATING BRIDGE DECK	SF	1440
PEDESTRIAN	WOOD COATING GUARDRAIL	LF	45
PEDESTRIAN	REMOVE AND REPLACE 42" GUARDRAIL	LF	45
VEHICULAR	EPOXY COATING ON WEAR DECK (ALT. 2)	SF	1170

*NOTE: QUANTITIES ARE ESTIMATED, CONTRACTOR IS RESPONSIBLE FOR VERIFYING QUANTITIES.

DAVIS & FLOYD
SINCE 1954
www.davisfloyd.com
240 STONERIDGE DR. SUITE 305
COLUMBIA, SC 29210
(803)-256-4121

OWNER: GEORGETOWN COUNTY

PROJECT TITLE: PAWLEY'S ISLAND, SC
SUMMER GATE COMMUNITY BRIDGE REFURBISHMENT

DRAWING TITLE: BRIDGE REFURBISHMENT NOTES

NO.	RELEASED	CHECKED	DATE

JOB NO. 31742.06
DATE XX-XX-2017
DESIGNED FCS
DRAWN FCS
CHECKED TJW
APPROVED TJW

S-100

PAGE OF

G:\JobsEven\31742-06\Production\Structural\Drawings\NOTES S-100.dwg, 2/1/2017 1:15:50 PM, clay settle
THESE DRAWINGS AND THE DESIGN THEREON ARE THE PROPERTY OF DAVIS & FLOYD, INC. AND MAY NOT BE USED IN WHOLE OR IN PART WITHOUT WRITTEN CONSENT OF THE ENGINEER / ARCHITECT AND ANY INFRINGEMENT WILL BE SUBJECT TO LEGAL ACTION

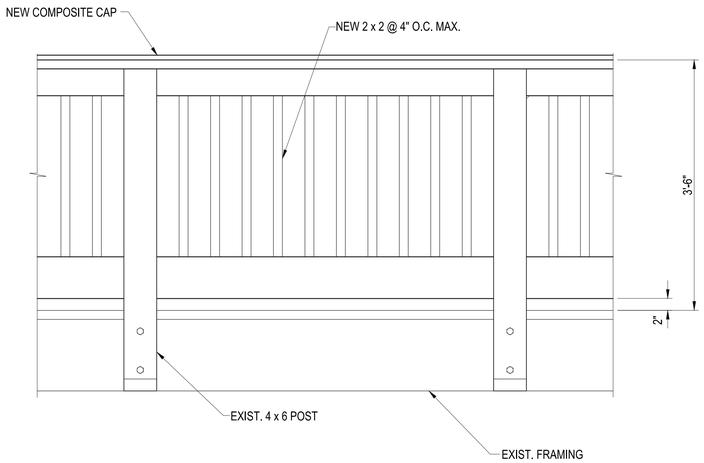

NOTE: ALL PICKETS SHALL BE SCREWED TO THE 2x6 SUPPORTS - DO NOT USE NAILS

GUARDRAIL ELEVATION

SCALE: 1" = 1' – 0"

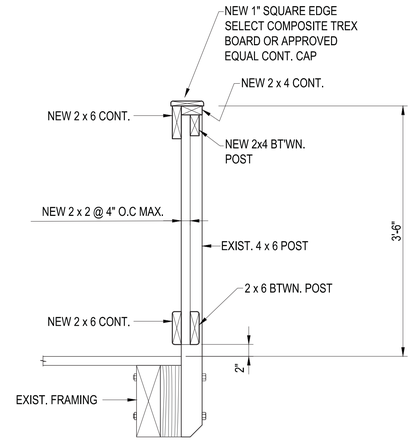

SECTION THRU GUARDRAIL

SCALE: 1" = 1' – 0"

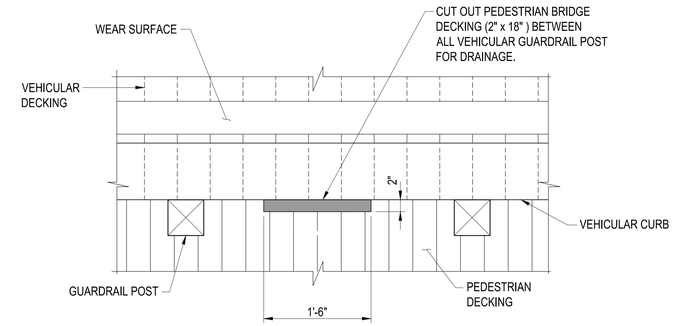

TYPICAL BRIDGE DRAINAGE DETAIL

SCALE: 1" = 1' – 0"

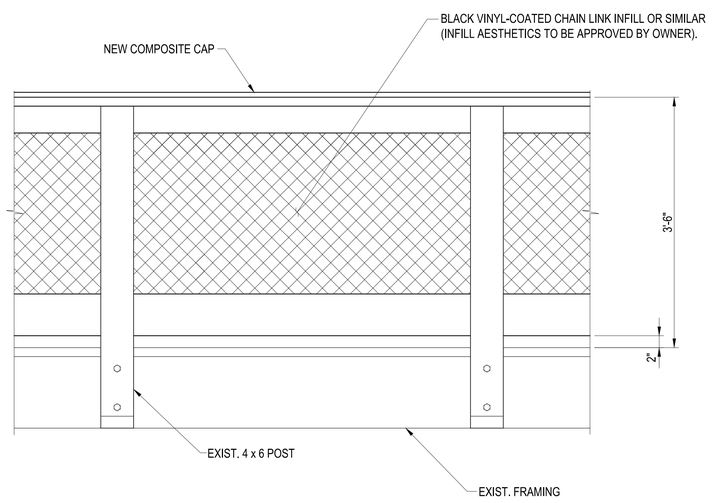

GUARDRAIL BID ALTERNATE 1 ELEVATION

SCALE: 1" = 1' – 0"

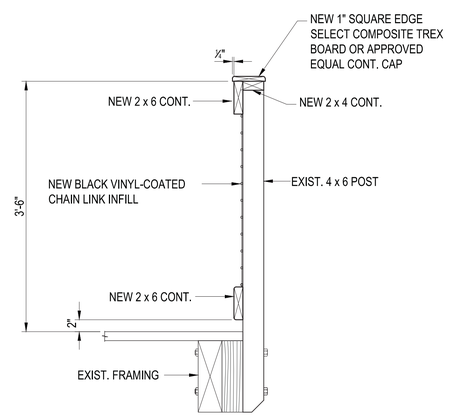

SECTION THRU BID ALTERNATE 1 GUARDRAIL

SCALE: 1" = 1' – 0"

G:\JobsEven\31742-06\Production\Structural\Drawings\BRIDGE REPAIR S-100.dwg, 2/1/2017 1:16:24 PM, cday settle
THESE DRAWINGS AND THE DESIGN THEREON ARE THE PROPERTY OF DAVIS & FLOYD, INC. AND MAY NOT BE USED IN WHOLE OR IN PART WITHOUT WRITTEN CONSENT OF THE ENGINEER / ARCHITECT AND ANY INFRINGEMENT WILL BE SUBJECT TO LEGAL ACTION

DAVIS & FLOYD
SINCE 1954
www.davisfloyd.com
240 STONERIDGE DR. SUITE 305
COLUMBIA, SC 29210
(803)-256-4121

OWNER: GEORGETOWN COUNTY
PAWLEY'S ISLAND, SC
PROJECT TITLE: SUMMER GATE COMMUNITY BRIDGE REFURBISHMENT

DRAWING TITLE: BRIDGE DETAILS

NO.	RELEASED	CHECKED	DATE

JOB NO. 31742.06
DATE XX-XX-2017
DESIGNED FCS
DRAWN ERS
CHECKED TJW
APPROVED TJW

PAGE S-101 OF

Public Bid Opening Tabulation
Bid #15-080, Maintenance and Rehabilitation of Timber Vehicular Bridges
Wednesday, March 8, 2017 at 4:00 PM Eastern NIST

VENDOR: Greenwall Construction Service

Item/Location	Base Bid	Alternate #1	Alternate #2
Bridge 2, Gilman Rd (26'W x 160'L)	$ 110,864.00	$ (1,500.80)	$ 28,412.80
Bridge 3, Gilman Rd (26'W x 75'L)	$ 67,394.25	$ <659.28>	$ 13,284.35
Bridge 1, Parish Rd (26'W x 70'L)	$ 69,287.40	$ <688.80>	$ 12,430.60
Bridge 4, Gilman Rd (26'W x 45'L)	$ 44,226.00	$ <443.25>	$ 7,991.10
Total by Column:	$ 291,771.65	$ <3,292.13>	$ 62,118.85

VENDOR: Backwoods Bridges, LLC

Item/Location	Base Bid	Alternate #1	Alternate #2
Bridge 2, Gilman Rd (26'W x 160'L)	$ 103,720.00	$ <560.00>	$ No Bid
Bridge 3, Gilman Rd (26'W x 75'L)	$ 48,059.50	$ <234.50>	$ No Bid
Bridge 1, Parish Rd (26'W x 70'L)	$ 44,135.00	$ <245.00>	$ No Bid
Bridge 4, Gilman Rd (26'W x 45'L)	$ 28,732.50	$ <147.50>	$ No Bid
Total by Column:	$ 224,647.00	$ <1,197.00>	$ —

AP

VENDOR:

Item/Location	Base Bid	Alternate #1	Alternate #2
Bridge 2, Gilman Rd (26'W x 160'L)	$	$	$
Bridge 3, Gilman Rd (26'W x 75'L)	$	$	$
Bridge 1, Parish Rd (26'W x 70'L)	$	$	$
Bridge 4, Gilman Rd (26'W x 45'L)	$	$	$
Total by Column:	$	$	$

Opened By

Ann G. Puckett
Witnessed By

Bid Worksheet for Bid# 15-080, Maintenance and Rehabilitation of Timber Vehicular Bridges

				BACKWOODS BRIDGES		GREENWALL CONSTRUCTION	
Bridge 2 (26'W X 160'L)							
BRIDGE AREA	ITEM	UNITS	QUANTITY	$/UNIT	$/EXTENDED	$/UNIT	$/EXTENDED
VEHICULAR	ADD 2X6 WEAR DECK	SF	4160	$ 10.50	$ 43,680.00	$ 26.65	$ 110,864.00
VEHICULAR	REMOVE AND REPLACE GUARDRAIL (6X10)	LF	275	$ 65.00	$ 17,875.00	$ 64.99	$ 17,872.25
VEHICULAR	REMOVE AND REPLACE CURB (6X10)	LF	275	$ 71.00	$ 19,525.00	$ 88.45	$ 24,323.75
VEHICULAR	WOOD COATING GUARDRAIL/CURB	LF	320	$ 7.25	$ 2,320.00	$ 18.03	$ 5,769.60
VEHICULAR/PEDESTRIAN	WOOD COATING BRIDGE DECK	SF	5120	$ 1.75	$ 8,960.00	$ 1.99	$ 10,188.80
PEDESTRIAN	WOOD COATING GUARDRAIL	LF	160	$ 8.50	$ 1,360.00	$ 20.72	$ 3,315.20
ALTERNATES - Bridge 2							
PEDESTRIAN	REMOVE AND REPLACE 42" GUARDRAIL	LF	160	$ 59.00	$ 9,440.00	$ (9.38)	$ (1,500.80)
VEHICULAR	EPOXY COATING ON WEAR DECK (ALT. 2)	SF	4160	[no bid]	#VALUE!	$ 6.83	$ 28,412.80
Bridge 3 (26'W X 75'L)							
BRIDGE AREA	ITEM	UNITS	QUANTITY	$/UNIT	$/EXTENDED	$/UNIT	$/EXTENDED
VEHICULAR	ADD 2X6 WEAR DECK	SF	1945	$ 10.50	$ 20,422.50	$ 34.65	$ 67,394.25
VEHICULAR	REMOVE AND REPLACE GUARDRAIL (6X10)	LF	130	$ 65.00	$ 8,450.00	$ 94.72	$ 12,313.60
VEHICULAR	REMOVE AND REPLACE CURB (6X10)	LF	130	$ 71.00	$ 9,230.00	$ 124.90	$ 16,237.00
VEHICULAR	WOOD COATING GUARDRAIL/CURB	LF	150	$ 7.25	$ 1,087.50	$ 21.18	$ 3,177.00
VEHICULAR/PEDESTRIAN	WOOD COATING BRIDGE DECK	SF	2350	$ 1.75	$ 4,112.50	$ 1.98	$ 4,653.00
PEDESTRIAN	WOOD COATING GUARDRAIL	LF	67	$ 8.50	$ 569.50	$ 21.06	$ 1,411.02
PEDESTRIAN	REMOVE AND REPLACE 42" GUARDRAIL	LF	67	$ 59.00	$ 3,953.00	$ (9.84)	$ (659.28)
VEHICULAR	EPOXY COATING ON WEAR DECK (ALT. 2)	SF	1945	[no bid]	#VALUE!	$ 6.83	$ 13,284.35
Bridge 1 (26'W X 70'L)							
BRIDGE AREA	ITEM	UNITS	QUANTITY	$/UNIT	$/EXTENDED	$/UNIT	$/EXTENDED
VEHICULAR	ADD 2X6 WEAR DECK	SF	1820	$ 10.50	$ 19,110.00	$ 38.07	$ 69,287.40
VEHICULAR	REMOVE AND REPLACE GUARDRAIL (6X10)	LF	120	$ 65.00	$ 7,800.00	$ 96.66	$ 11,599.20
VEHICULAR	REMOVE AND REPLACE CURB (6X10)	LF	120	$ 61.00	$ 7,320.00	$ 121.96	$ 14,635.20
VEHICULAR	WOOD COATING GUARDRAIL/CURB	LF	140	$ 7.25	$ 1,015.00	$ 17.53	$ 2,454.20
VEHICULAR/PEDESTRIAN	WOOD COATING BRIDGE DECK	SF	2240	$ 1.75	$ 3,920.00	$ 1.99	$ 4,457.60
PEDESTRIAN	WOOD COATING GUARDRAIL	LF	70	$ 8.50	$ 595.00	$ 20.66	$ 1,446.20
ALTERNATES - Bridge 1							
PEDESTRIAN	REMOVE AND REPLACE 42" GUARDRAIL	LF	70	$ 59.00	$ 4,130.00	$ (9.84)	$ (688.80)
VEHICULAR	EPOXY COATING ON WEAR DECK (ALT. 2)	SF	1820	[no bid]	#VALUE!	$ 6.83	$ 12,430.60
Bridge 4 (26'W X 45'L)							
BRIDGE AREA	ITEM	UNITS	QUANTITY	$/UNIT	$/EXTENDED	$/UNIT	$/EXTENDED
VEHICULAR	ADD 2X6 WEAR DECK	SF	1170	$ 10.50	$ 12,285.00	$ 37.80	$ 44,226.00
VEHICULAR	REMOVE AND REPLACE GUARDRAIL (6X10)	LF	80	$ 65.00	$ 5,200.00	$ 137.28	$ 10,982.40
VEHICULAR	REMOVE AND REPLACE CURB (6X10)	LF	80	$ 61.00	$ 4,880.00	$ 144.38	$ 11,550.40
VEHICULAR	WOOD COATING GUARDRAIL/CURB	LF	90	$ 7.25	$ 652.50	$ 18.23	$ 1,640.70
VEHICULAR/PEDESTRIAN	WOOD COATING BRIDGE DECK	SF	1440	$ 1.75	$ 2,520.00	$ 1.99	$ 2,865.60
PEDESTRIAN	WOOD COATING GUARDRAIL	LF	45	$ 8.50	$ 382.50	$ 21.45	$ 965.25
ALTERNATES - Bridge 4							
PEDESTRIAN	REMOVE AND REPLACE 42" GUARDRAIL	LF	45	$ 59.00	$ 2,655.00	$ (9.85)	$ (443.25)
VEHICULAR	EPOXY COATING ON WEAR DECK (ALT. 2)	SF	1170	[no bid]	#VALUE!	$ 6.83	$ 7,991.10

GREENWALL CONSTRUCTION	Base Bid Only	Alternate #1	Alternate #2	Base Bid w/ Alt 1	Base Bid w/ Alt 2	Base Bid w/ Alt 1 & 2
Bridge 2 (26'W x 160'L)	$ 110,864.00	$ (1,500.80)	$ 28,412.80	$ 109,363.20	$ 139,276.80	$ 137,776.00
Bridge 3 (26'W x 75'L)	$ 67,394.25	$ (659.28)	$ 13,284.35	$ 66,734.97	$ 80,678.60	$ 80,019.32
Bridge 1 (26'W x 70'L)	$ 69,287.40	$ (688.80)	$ 12,430.60	$ 68,598.60	$ 81,718.00	$ 81,029.20
Bridge 4 (26'W x 45'L)	$ 44,226.00	$ (443.25)	$ 7,991.10	$ 43,782.75	$ 52,217.10	$ 51,773.85
Total	**$ 291,771.65**	**$ (3,292.13)**	**$ 62,118.85**	**$ 288,479.52**	**$ 353,890.50**	**$ 350,598.37**

BACKWOODS BRIDGES	Base Bid Only	Alternate #1	Alternate #2	Base Bid w/ Alt 1	Base Bid w/ Alt 2	Base Bid w/ Alt 1 & 2
Bridge 2 (26'W x 160'L)	$ 103,720.00	$ (560.00)	[No Bid]	$ 103,160.00	[No Bid]	[No Bid]
Bridge 3 (26'W x 75'L)	$ 48,059.50	$ (234.50)	[No Bid]	$ 47,825.00	[No Bid]	[No Bid]
Bridge 1 (26'W x 70'L)	$ 44,135.00	$ (245.00)	[No Bid]	$ 43,890.00	[No Bid]	[No Bid]
Bridge 4 (26'W x 45'L)	$ 28,732.50	$ (147.50)	[No Bid]	$ 28,585.00	[No Bid]	[No Bid]
Total	**$ 224,647.00**	**$ (1,187.00)**	**$ -**	**$ 223,460.00**	**$ -**	**$ -**

Georgetown County
Department of Public Works
Phone: (843) 545-3436
Fax: (843) 545-3486

Memorandum

To: Kyle Prufer

From: Ray Funnye, Director

Date: May 3, 2017

Re: Recommendation for Bid #15-080, Wooden Bridge Maintenance

---

On March 8, 2017, Georgetown County issued an Invitation for Bid for Wooden Bridge Maintenance, Bid #15-080, for timber bridge *maintenance and rehabilitation services* to prolong the usable life of four (4) Timber Vehicular Bridges. These are located on Gilman Road and Parish Road in the Pawley's Island Community. The current budgeted amount for this Project is $263,000.00, and is funded by the CTC Program.

A total of two (2) bids were received. Of the two respondents, both were found to be complete bid packages responding to all items. Staff reviewed the bids and confirmed their accuracy. The lowest bid was from Backwoods Bridges, LLC of Freeport, Florida with a base bid of $224,647.00. It was noted that their Alternate bid of $223,460.00 would save $1,197.00 by replacing the existing 2" x 2" wooden balusters with black vinyl chain link.

Based on the aforementioned I recommend that Backwoods Bridges, LLC of Freeport, Florida be awarded the contract for a total amount of $223,460.00.

Item Number:	6.c
Meeting Date:	5/9/2017
Item Type:	CONSENT AGENDA

AGENDA REQUEST FORM
GEORGETOWN COUNTY COUNCIL

DEPARTMENT: Purchasing

ISSUE UNDER CONSIDERATION:
Contract #16-043, Change Order 04 (Final) to Murrells Inlet Dredging Project: Parsonage and Main Creeks

CURRENT STATUS:
1) The contract to award to Waterfront Property Services, LLC d/b/a Gator Dredging of Clearwater, FL was approved by County Council in the regular session of September 27, 2016.

2) The County has in hand the signed contract, performance bond, payment and material bond, and appropriate certificate of insurance.

3) County Council approved Change Order 01 in the regular session of November 15, 2016.

4) County Council approved Change Order 02 in the regular session of December 13, 2016.

5) The County Administrator approved Change Order 03 on February 09, 2017.

POINTS TO CONSIDER:
1) The current contract value after the incorporating of Change Orders 1, 2, & 3 is:

Original Contract Value:	$3,809,650.00
Change Order 01:	$ 59,972.43
Change Order 02:	<$ 371,299.42>
Change Order 03:	$ Ø
	==========
Current Contract Value:	$3,498,323.01

2) Change Order 04, as presented for consideration in the amount of $404,306.25 will include the final project adjustments as itemized on page two (2) of the attached change order.

3) Upon approval of Change Order 04, the final value of the contract agreement will be $3,902,629.26.

FINANCIAL IMPACT:
This project is funded in Project G/L 89007.2000.0201 0431 (County Dredging) using the 1¢ Sales Tax and remains fully funded.

OPTIONS:
1) Approve Contract #16-043, Change Order 04 to Waterfront Property Services, LLC d/b/a Gator Dredging in the amount of $404,306.25 as proposed to include final adjustments made by the County to those services itemized in Change Order 04, making the revised value of the agreement $3,902,629.26; OR
2) Decline to approve the Change Order.

STAFF RECOMMENDATIONS:
Staff recommendation is to approve Contract #16-043, Change Order 04 as proposed and attached.

ATTORNEY REVIEW:
Yes

ATTACHMENTS:

	Description	Type
	PROPOSED Contract 16-043, Change Order 04	Backup Material
	Recommendation from Mr. Funnye	Backup Material
	DRAFT PO #2017-00000299-3	Backup Material

Georgetown County, South Carolina

Execution of Contract Change or Adjustment

Type of Change: ☑ Change Order ☐ Contract Amendment ☐ Task Order ☐ Other:

Contract #	Sequence #	Amendment #
16-043	4	
Project #	**GL Account**	**Purchase Order**
Murrells Inlet Dredging	89007.20000.0201.50431	TBD
PRIOR Contract $ Total	**$ Amount of this Change (+/-)**	**REVISED Contract $ Total**
$3,498,323.01	$404,306.25	$3,902,629.26

Administration Use ONLY		
	Signature	Date
Budget Verified:	[signature]	5-2-2017
Change Originator:	Art Baker	04/28/17

Consultant Name:	Waterfront Property Services, LLC d/b/a Gator Dredging
Contract Title:	Murrells Inlet Maintenance Dredging Project: Parsonage and Main Creeks
Task Order Name:	Final Adjusting Change Order
Scope of Work:	See attached schedule $ 404,306.25 ========== Change Order Total $ 404,306.25
List Authorized Sub-Consultants:	n/a
Deliverables:	Additional dredging depths and cleanup areas as shown on attached drawing.
Justification for Change:	Additional dredge volume from pre-dredge survey vs. original design survey. Cleanup for dredge areas. To ensure dredge depths and to deepen Channels C & D.
Start Date: NTP	**Completion Date:** July 15, 2017 (Dredging May 31)

The parties indicated herein have executed this agreement on the dates written below, the latest of which shall be deemed to be the effective date. No payment will be made for any work performed prior to the effective date. Unless otherwise indicated, receipt of this executed agreement is your Notice to Proceed with the work specified herein.

Georgetown County, SC Signatures:

[signature] 05/02/17

Date

Ray C. Funnye
Director of Public Services

Johnny Morant
Chair - County Council

Date

Waterfront Property Services, LLC d/b/a Gator Dredg

(Signature) 04/28/17

Date

NOTES:

1. This form is intended as a guide to identify minimum requirements for a contract change or adjustment. All changes must also be compliant with the provisions of the contract.

2. Where the intended change cannot be accommodated on this form; use as a cover (noting "See Attached" in the appropriate spaces above) to provide accounting codes, Admin authorization and signatures. Any substitute format **must** include all elements of this form for each item of work.

3. Attach additional budget forms as needed when multiple tasks and resources are proposed.

Final Adjusting Change Order							
Drawing Designation	Description	Planimetric Additional (CY)	15% Allowance for Side Slopes (CY)	Additional 15% Allowance for Sloughing (CY)	Total Additional (CY)	Unit Cost ($/CY)	Additional Cost
	Additional from Pre-Dredge Survey (24,045 CY Pre Dredge - 22,000 CY Bid)	2,045	-		2,045	$ 62.50	$ 127,812.50
X1	Cleanup for Marshwalk (B-C)	738	110.7	110.7	959	$ 62.50	$ 59,962.50
X2	Additional For David Owens (NTE $10k)	130	19.5		150	$ 62.50	$ 9,343.75
X3	Curve @ Marshwalk / Channel C	137	20.6		158	$ 62.50	$ 9,846.88
X4	Additional 1' for Channel C (Main)	903	135.5		1,038	$ 62.50	$ 64,903.13
X5	Additional 1' for Channel C (Transition)	213	32.0		245	$ 62.50	$ 15,309.38
X6	Additional 1' for Channel D (Main)	799	119.9		919	$ 62.50	$ 57,428.13
X7	Additional 1' for Channel D (Transition)	170	25.5		196	$ 62.50	$ 12,218.75
X8	Cleanup for Marshwalk (C-D)	263	39.5	39.5	342	$ 62.50	$ 21,368.75
X9	Curve @ Channel C - North (50'X5')	58	8.7		67	$ 62.50	$ 4,168.75
X10	Curve @ Channel D - North (30'X5')	34	5.1		39	$ 62.50	$ 2,443.75
	Re-Mobilizaiton Cost to Channel D						$ 19,500.00
Total		**5,490**	**517**		**6,157**	**n/a**	**$ 404,306.25**

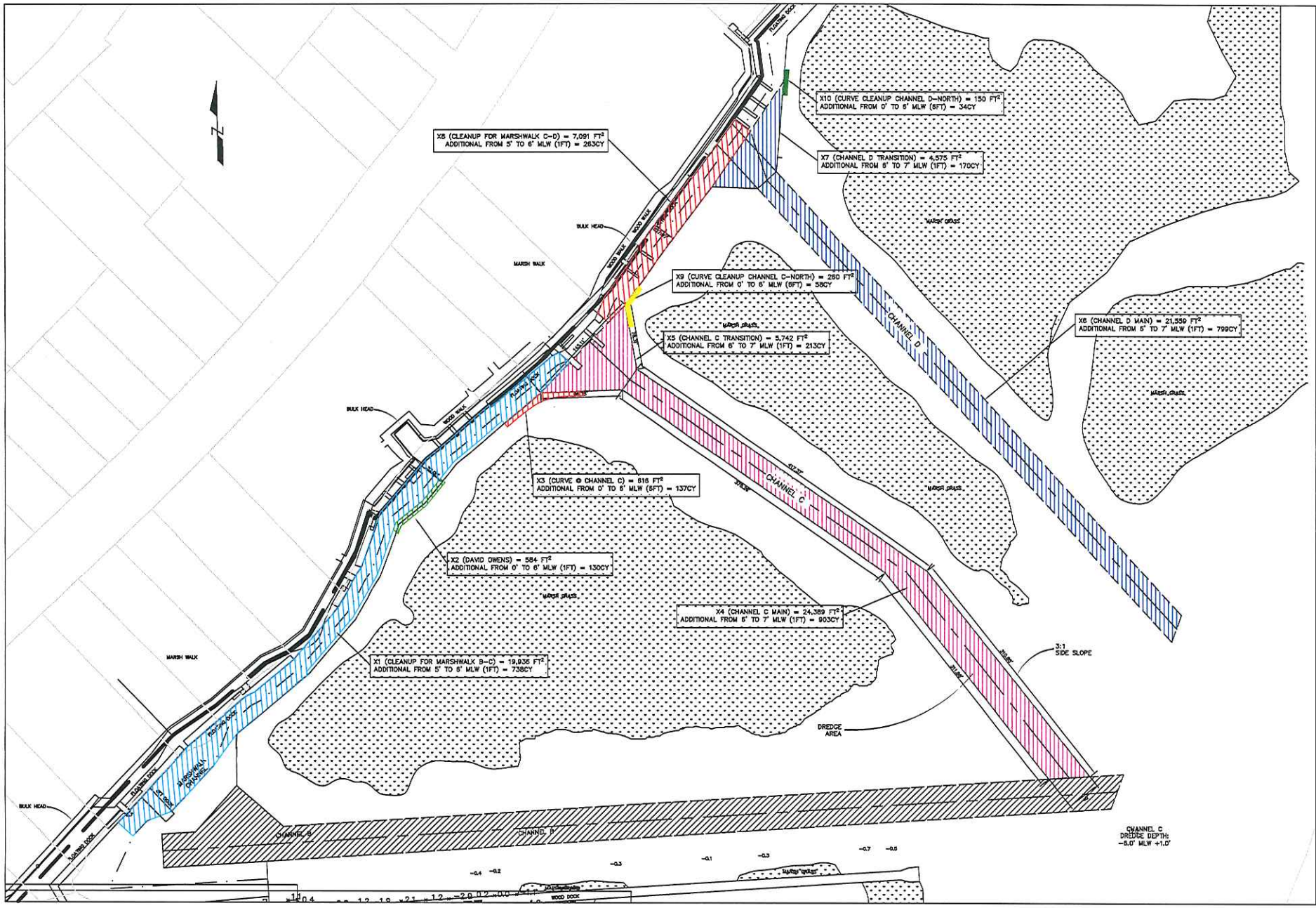

Georgetown County
129 Screven Street, Georgetown, SC 29442
Phone: (843) 545-3000 Fax: (843) 545-3005
Internet: www.georgetowncounty.org

MURRELLS INLET DREDGING
GEORGETOWN COUNTY, SOUTH CAROLINA

PROJECT:

SCALE: 1:100

DESIGNED BY: ASB

DRAWN BY: MPM

DATE: 4/24/2017

FINAL CO

SHEET NO:

Art Baker

From: David Owens <davidfowens3@gmail.com>
Sent: Thursday, April 20, 2017 8:06 AM
To: Art Baker
Cc: Ray C. Funnye; Jennifer L. Dirks; Larry Setzler (GEL)
Subject: Re: Marshwalk - Additional Dredge Area at Dockside

Follow Up Flag: Follow up
Flag Status: Flagged

I concur with this request and agree to the additional charge. I also want to THANK YOU and all of the county staff involved for stepping up and making sure this project is done right.
i criticize the county on a lot of issues, but I commend you on this project.

Regards,

David Owens

On Apr 19, 2017, at 5:59 PM, Art Baker <abaker@gtcounty.org> wrote:

David,
Confirming our discussion today at the site with Gator Dredging:

- You have requested an additional 6' wide strip (calculated as 7' wide average due to variances) to be dredged along the eastern side of the Marshwalk Channel
- Attached is a Sketch showing the additional Area
- Total Cost not to exceed (NTE) $10,000.
- Cost to be paid for by DFO II

Due to the limited time frame, we have instructed the contractor to immediately implement this change.
Can you please confirm concurrence of this request?

Many thanks,
Art

Art Baker, PE

Engineering and Capital Projects Manager

Department of Public Services
Office (843) 545-3255

abaker@gtcounty.org

INNOVATION, LEADERSHIP AND TEAMWORK!
<image001.jpg><IMAGE002.JPG>

<20170419 Dead Dog-Channel Widening.pdf>

GEORGETOWN COUNTY
DEPARTMENT OF PUBLIC SERVICES
DIVISION OF ENGINEERING & CAPITAL PROJECTS
1918 Church St. Georgetown, SC 29440

May 1, 2017

Mr. Kyle Prufer
Purchasing Officer
Georgetown County
129 Screven St.
Georgetown, SC 29440

Re: **Final Adjusting Change Order-**
Murrells Inlet Dredging (County)

Dear Kyle,

Please accept this letter of justification for the Final Adjusting Change Order (No. 4) pertaining to the contract with Gator Dredging. The Change Order is divided into several parts, each labeled on the summary and the map. Each of them are discussed below.

Additional from Pre-Dredge Survey (24,045 CY Pre Dredge - 22,000 CY Bid)

- This volume is the difference between the volume of the project as calculated in the original design vs. the volume as calculated in the pre-dredge survey. We would assume that the additional volume was caused by additional sediment deposited from the storm surge of Hurricane Matthew.
- A portion of this volume was covered by the "reserve" volume which we had in the bid.

X1 and X8 (Cleanup for Marshwalk)

- All of the owners along the Marshwalk complained about the depth of the initial dredging. It appeared that Gator had not reached the intended depth of 5' MLW. They had also not met the required depth of 4' MLW at some locations. We received several complaints regarding this.
- By dredging to 6' MLW, this resolved the following issues:
    - Resolved refund/dispute with the property owners
    - Assured that this would not be a liability for the County
    - Resolved the issues of the actual dredge payment volume based on the GEL post-dredge survey

X2 (Additional for David Owens)

- This was requested in the field by Mr. Owens for widening of the channel along a portion of his frontage.
- Mr. Owens will compensate the county for this additional volume.

X3, X9, X10 (Curves at Channel Transitions)

- There were several complaints regarding the curves at the channel transitions at these locations.

X4, X5, X6, X7 (Additional 1' for Channels C and D)

- We received complaints from both Express Watersports (at Drunken Jacks) and Mrs. Nicholls (Wahoos and Bovines) regarding the shallow depths for both channels.
- We met with charter boat captains at Wahoos, and they confirmed the issues with shallow depths.

- We also received complaints of boats sucking up shells, which would be a possible liability for the county.
- Post-dredge survey from GEL indicated that Gator generally obtained the contracted depth (5' MLW), but did not obtained the intended depth (6' MLW).
- By dredging to 7' MLW, this resolved the following issues:
    - Assured that this would not be a liability for the County
    - Resolved the issues of the actual dredge payment volume based on the GEL post-dredge survey

The intent of these modifications was to protect the county from liability and also to ensure a positive project completion for all parties. Furthermore, since dredging is only performed every 10-15 years, this ensures navigable channels for years to come. We trust that the justifications provide are considered sufficient and acceptable. We have done our best to ensure a positive project outcome and to protect the interests of the County.

Sincerely,

Art Baker, PE
Engineering and Capital Project Manager
Department of Public Services
Georgetown County
Office: 843.545.3255
Mobile: 843-267-4257
Email: abaker@gtcounty.org

Art Baker

From: Charlie Campbell <cjc80888@aol.com>
Sent: Wednesday, March 01, 2017 4:03 PM
To: larry.setzler@gel.com; Art Baker
Cc: davidfowens3@gmail.com; peter@deaddogsaloon.com; jcampbell@deaddogsaloon.com
Subject: Dredging Issues.

Hi Art,

I want to alert you so some very serious dredging issues as it relates to at least Claw House. Dead Dog as well as Creek Ratz. I am writing on behalf of David Owens as well. Yesterday, Tuesday, was the first time we had a full mean low tide and thus we were able to witness for the first time the depth of the dredge. Measurements were taken in the middle of the creek running along the restaurants. from Bovines down to The Claw House. While the northern end of the creek seemed satisfactory, measuring approximately 4 feet, measurements taken IN THE MIDDLE OF THE CREEK, from Creek Ratz, Dead Dog and The Claw House, showd only 2.5 feet, and again, this is out in the middle of the creek. Didn't the contract call for 4' plus 1'? This is further exacerbated by the job done at and under my docks, DD and CH. At mean low tide both docks were sitting up on mud at about a 20 degree angle, totally unacceptable. When you had called me last week to be sure we were OK, it was impossible to determine that, due to the mild low tides. You had mentioned that we would have 4 feet under and at the docks at low tide and we are not even close. we have zero feet. in fact plus feet at the read edge of our docks.

Art, it is my view that not only did the three mentioned restaurants not get what they paid for, but Georgetown County did not get what they paid for. This is extremely disappointing and I, as does David, feel that this needs to be rectified. Gator has simply not lived up to it's contract.

I would be happy to meet you out at the docks at low tide and show you the problem in person. We appreciate whatever efforts you can put forth to fix this problem.

Best regards,
Charlie Campbell

Art Baker

From: David Owens <davidfowens3@gmail.com>
Sent: Wednesday, March 22, 2017 11:31 AM
To: Art Baker
Cc: Charlie Campbell
Subject: Marshwalk Dredging

Art,

Hope all is well with you, I'm sure you will be happy to see this dredging project come to an end. I believe that Charlie Campbell emailed you a few weeks ago about our concerns with the depth and width of the Marshwalk channel.
I am just following up to see where everything stands at this time, as neither of us has heard anything back from the county.
I have heard from numerous boaters transiting this area that they are not marking the depths that we are supposed to have and at low tide it is very obvious that it was not a job well done.
I understand that at this point there is no way to get the dredge back to fix the problem, but I feel that the county should lean hard on Gator Dredging to adjust the final cost down, based on the quality of the job done.
Hope to hear from you soon.

Regards,
David Owens

Art Baker

From: Support <support@expresswatersports.com>
Sent: Wednesday, April 12, 2017 7:23 PM
To: Art Baker
Subject: post dredging numbers

Hello Art,

I personally did not have the opportunity to attend the last dredge meeting concerning the Marshwalk dredging and the access channels but my wife, Jennifer, did.

The county addressed the shortfalls in dredge area material and presented a survey map where the dredge company needed to come back in.

It was mentioned that the county did not have post dredge numbers for the Marshwalk and the surrounding access channels. The only numbers presented by the county were where the dredge company did not reach 4 feet and that the over dredge to 5 feet was not going to be accomplished. It was mentioned that now 4 feet was the minimum or average that was going to be met.

We are commercial boat operators who uses the basin and access channel to the federal channel on a hourly basis daily from March -November. We know in our basin and in the access Channel C exactly where every hump, turn, high spot, low spot, sandy spot, and fluff mud spot are located throughout!

Our vessels draw an average of 4 feet of water in the basin and channel. We were counting on 5 feet to buffer that difference. If we had been aware that only the minimum of 4 feet was going to be met and the basin was going to average entirely to 4 feet we would have withdrew parts of our basin to be dredged as it was already at or exceeded the averaged dredge depth.

We were surprised to find that areas of our basin seemed to gain material from the dredging not reduce it! Areas of our basin that had plenty of water at a low low tide now only have the same amount give or take as other parts of the basin! It appears the dredging company has averaged the basin to one depth! I

We are now sucking up mud and shells while going through our basin and channel into the intakes of our commercial boats! This has never happened before! We are stirring up mud in the channel and basins before low tide even arrives now!

We have talked to other charter and commercial fishing operators along the Marshwalk and they too are experiencing the same issues!

Our busy tourist season is already here with Spring Break! There is no way we can have dredge pipe and equipment blocking the channels during this time!

I assume that since the calculations for dredge material was based on cubic yards of material dredged and the material along the Marahwalk was not dredged to 5 ft, that we are looking at a lower cost for this dredging cycle!

Express Watersports is paying up to 70% of the dredging behind Drucken Jacks. We are very concerned with the cost and expense of this dredging and what we are actually getting in return.

We have respectively requested the post dredge survey numbers for the Marshwalk area and the channels surrounding it so that we may see what these numbers are compared to the numbers we were presented pre-dredge! If at all possible, Please send a PDF File of the pre and the post dredging survey numbers so we can enlarge it clearly.

Very Concerned,

Jonathan Poore

EXPRESS watersports

4042 Highway 17 Business
Murrells Inlet, SC 29576
843-357-7777

info@expresswatersports.com
www.expresswatersports.com

Art Baker

From: bythec1164@aol.com
Sent: Thursday, April 20, 2017 3:37 PM
To: Art Baker
Subject: Dredging at Wahoo's & Bovines

Follow Up Flag: Follow up
Flag Status: Flagged

Art,

Please make sure that GEL dredges again behind Wahoo's and Bovines on Parsonage Creek and also on Channel D.

Our commercial fishermen are telling us their depth sounders at low tide are reading 3 feet, and Channel D is reading 1 foot.

The bank in the main channel and the banks at the corners where you make your turn into Parsonage Creek are too shallow and too narrow to navigate. I watched my inshore commercial boats coming in at low tide, and they could barely navigate into the boat slip because of channel being too shallow and too narrow

Please mention these concerns to Gel that we need them to come back to our end and remedy these problems.

If you have questions you can give me a call or Ernest Edwards our General Manager, 843-457-0122

Thank you for your help,
Paula Nichols
843-457-8016

Art Baker

From: David Owens <davidfowens3@gmail.com>
Sent: Thursday, April 20, 2017 8:06 AM
To: Art Baker
Cc: Ray C. Funnye; Jennifer L. Dirks; Larry Setzler (GEL)
Subject: Re: Marshwalk - Additional Dredge Area at Dockside

Follow Up Flag: Follow up
Flag Status: Flagged

I concur with this request and agree to the additional charge. I also want to THANK YOU and all of the county staff involved for stepping up and making sure this project is done right.
i criticize the county on a lot of issues, but I commend you on this project.

Regards,

David Owens

On Apr 19, 2017, at 5:59 PM, Art Baker <abaker@gtcounty.org> wrote:

David,
Confirming our discussion today at the site with Gator Dredging:

- You have requested an additional 6' wide strip (calculated as 7' wide average due to variances) to be dredged along the eastern side of the Marshwalk Channel
- Attached is a Sketch showing the additional Area
- Total Cost not to exceed (NTE) $10,000.
- Cost to be paid for by DFO II

Due to the limited time frame, we have instructed the contractor to immediately implement this change.
Can you please confirm concurrence of this request?

Many thanks,
Art

Art Baker, PE

Engineering and Capital Projects Manager

Department of Public Services
Office (843) 545-3255

abaker@gtcounty.org

INNOVATION, LEADERSHIP AND TEAMWORK!
<image001.jpg><IMAGE002.JPG>

<20170419 Dead Dog-Channel Widening.pdf>

Georgetown County
Department of Public Works
Phone: (843) 545-3436
Fax: (843) 545- 3486

Memorandum

To: Kyle Prufer

From: Ray Funnye, Director

Date: May 2, 2017

File No: 316.16

Re: Letter of justification for the Final Adjusting Change Order (No. 4)

Please accept this letter of justification for the Final Adjusting Change Order (No. 4) pertaining to the contract with Gator Dredging. The Change Order is divided into several parts, each labeled on the summary and the map. Each of them are discussed below:

Additional from Pre Dredge Survey (24,045 CY Pre Dredge - 22,000 CY Bid)

- This volume is the difference between the volume of the project as calculated in the original design vs. the volume as calculated in the pre-dredge survey. We would assume that the additional volume was caused by additional sediment deposited from the storm surge of Hurricane Matthew.
- A portion of this volume was covered by the “reserve” volume which we had in the bid.

X1 and X8 (Cleanup for Marshwalk)

- All of the owners along the Marshwalk complained about the depth of the initial dredging. It appeared that Gator had not reached the intended depth of 5’ MLW. They had also not met the required depth of 4’ MLW at some locations. We received several complaints regarding this.
- By dredging to 6’ MLW, this resolved the following issues:
    - Resolved refund/dispute with the property owners
    - Assured that this would not be a liability for the County
    - Resolved the issues of the actual dredge payment volume based on the GEL post- dredge survey

X2 (Additional for David Owens)

- This was requested in the field by Mr. Owens for widening of the channel along a portion of his frontage.
- Mr. Owens will compensate the county for this additional volume. X3, X9, X10 (Curves at Channel Transitions)
- There were several complaints regarding the curves at the channel transitions at these locations.

X4, X5, X6, X7 (Additional 1' for Channels C and D)

- We received complaints from both Express Watersports (at Drunken Jacks) and Mrs. Nicholls (Wahoos and Bovines) regarding the shallow depths for both channels.
- We met with charter boat captains at Wahoos, and they confirmed the issues with shallow depths.
- We also received complaints of boats sucking up shells, which would be a possible liability for the county.
- Post-dredge survey from GEL indicated that Gator generally obtained the contracted depth (5' MLW), but did not obtained the intended depth (6' MLW).
- By dredging to 7' MLW, this resolved the following issues:
    - Assured that this would not be a liability for the County
    - Resolved the issues of the actual dredge payment volume based on the GEL post-dredge survey

The intent of these modifications was to protect the county from liability and also to ensure a positive project completion for all parties. Furthermore, since dredging is only performed every 10 -15 years, this ensures navigable channels for years to come. We trust that the justifications provide are considered sufficient and acceptable. We have done our best to ensure a positive project outcome and to protect the interests of the County.

Based upon the aforementioned, I recommend approval of Final Adjusting Change Order (No. 4).

Bill To
GEORGETOWN COUNTY
ATTN ACCOUNTS PAYABLE
PO BOX 421270
GEORGETOWN, SC 29442-4200

Ship To
GEORGETOWN COUNTY
PUBLIC SERVICES DEPARTMENT
108 Screven Street
Georgetown, SC 29440-3642

Change Purchase Order
No. 2017-00000299-3

05/02/17

PURCHASE ORDER NUMBER MUST APPEAR ON ALL INVOICES, SHIPMENTS, BILL OF LADING, AND CORRESPONDENCE

Vendor 1130899 Waterfront Property Services LLC - GATOR DREDGING

Contact
Waterfront Property Services LLC - GATOR DREDGING
ATTN: William J Coughlin III
13630 50th Way N
Clearwater, FL 33760

Deliver by	04/07/17
Ship Via	INST
Freight Terms	SITEWORK
Originator	Kyle Prufer
Resolution Number	Procurement 16-043, C/O 4
Invoice Terms	SPEC

Quantity	U/M	Description	Part Number	Unit Cost	Total Cost
3902929.2600	$/US	DREDGING-MURRELLS INLET		$1.0000	$3,902,929.26

Item Description Murrells Inlet Maintenance Dredging Project: Parsonage & Main
Detail Description Creeks, per specifications and requirements provided in Bid #16-043:

Original Contract Amount:	$3,809,650.00
Change Order 01:	$ 59,972.43
	=========
VALUE on 11/16/2016	$3,869,622.43
Change Order 02:	<$ 371,299.42>
	==========
VALUE on 12/13/2016	$3,498,323.01
Change Order 03:	$ 0
Change Order 04:	$ 404,306.25
	==========
VALUE on 05/09/2017	$3,902,929.26

DRAFT

G/L Account	*Project*	*Amount*	*Percent*
89007.20000.0201-50718 (Other Capital Outlay)			100.00%

Level	*Level Description*	*Date*	*Approval User*
3	Purchasing	5/2/2017	Kyle Prufer

Subtotal	$3,902,929.26
Sales Tax	$0.00
Total Due	$3,902,929.26

Change Reason
UPDATE

Total Cost	$3,902,929.26
Amount Voided	
Amount Expensed	$2,882,315.71
Amount Encumbered	$1,020,613.55
Amount Discounted	
Amount Remaining	$1,020,613.55

SIGNATURE

SIGNATURE

Special Instructions
REVISED PURCHASE ORDER: This is a change order, please do not duplicate the original purchase order.
EMAIL TO:_____
COMPANY:_____
FROM: Georgetown County, SC Purchasing Office
Phone: (843)545-3083 - FAX: (832)545-3500 - EMail: purch@gtcounty.org

Item Number:	7.a
Meeting Date:	5/9/2017
Item Type:	PUBLIC HEARINGS

AGENDA REQUEST FORM
GEORGETOWN COUNTY COUNCIL

DEPARTMENT: County Council

ISSUE UNDER CONSIDERATION:
Ordinance No. 2017-09 - Authorizing Georgetown County, South Carolina, to Enter Into One or More Amendments or Supplements to the Base Lease and Conveyance Agreement and the Installment Purchase and Use Agreement Each Dated December 1, 2009, and as Heretofore Amended, Between Georgetown County and SCAGO Public Facilities Corporation for Georgetown County, to Approve the Form and Terms of One or More Amendments or Supplements to the Trust Agreement Dated December 1, 2009, as Heretofore Supplemented, Between SCAGO Public Facilities Corporation for Georgetown County and Wells Fargo Bank, N.A. as Trustee, in Connection with the Issuance of Certain Installment Purchase Refunding Revenue Bonds (Georgetown County Project), in One or More Series, With Appropriate Series Designations, and to Enter Into a Forward Sale and Delivery, Rate Lock or Term Loan Agreement Related to the Forward Sale and Delivery of Such Bonds; Consenting to the Issuance of Such Installment Purchase Refunding Revenue Bonds in the Aggregate Principal Amount of Not Exceeding $30,000,000; Delegating the Authority to the County Administrator to Approve and Determine Certain Matters; and Other Matters Relating Thereto.

CURRENT STATUS:
Pending

POINTS TO CONSIDER:
Georgetown County, Installment Purchase Revenue Bond (Georgetown County Project), Series 2008, the purposes for which are provided in the 2009 Installment Purchase and Use Agreement and the 2009 Trust Agreement between Georgetown County and SCAGO Public Facilities Corporation. The Corporation used the proceeds from the sale of the 2009B Bonds for the purposes of defraying the cost of acquiring, constructing, renovating, installing and equipping new and existing public facilities, as well as for such other purposes as are provided in the 2009 installment Use and Purchase Agreement and the 2009 Trust Agreement.

Based on current market conditions and projected savings, it may be in the best interest of the County to request the Corporation to refund all or a portion of the outstanding 2009 Bonds (the "Refunded Bonds") because a savings may be effected through such refunding. However, the County has been advised by the Financial Advisor and the County's Bond Counsel that federal tax law prohibits the Refunded Bonds from being refunded prior to maturity with tax-exempt obligations until at least September 2019 and that, because current market conditions may change, it may be advantageous for the Corporation and the County to execute a forward sale and delivery agreement, rate lock agreement or term loan agreement with the Purchaser/Underwriter in order to lock in an interest rate on the Bonds between the date of this Ordinance and September 2019, in anticipation of the actual sale and delivery of the Bonds occurring in September 2019 or afterwards, all as determined by the Authorized Officers upon advice of Bond Counsel and the Financial Advisor.

Certain authority relating to such refunding is delegated to the Authorized Officers (as defined herein) through the proposed Ordinance, including but not limited to the authority to determine the amount of the Refunded Bonds.

It is now in the best interest of the County for the County Council to approve the issuance and sale by the Corporation of the Bonds in the principal amount of not exceeding $30,000,000, in one or more series issued as taxable or tax-exempt obligations. The proceeds of the Bonds shall be used by the Corporation for one or more purposes, including (i) refunding the Refunded Bonds; (ii) funding a subaccount of the Reserve Account of the Bond Fund established for the Bonds, if any, in an amount equal to the Reserve Requirement, if any, established therefor; and (iii) paying all or a portion of certain costs and expenses relating to the issuance of the Bonds, including the premiums for insurance or surety bonds applicable to the Bonds, if any, or costs associated with the Forward Delivery Agreement.

OPTIONS:
Options regarding the adoption of Ordinance No. 2017-09 are provided under separate report.

STAFF RECOMMENDATIONS:
Recommendations for the adoption of Ordinance No. 2017-09 are provided under separate report.

ATTACHMENTS:

	Description	Type
	Ordinance No. 2017-09 Authorizing Georgetown County, South Carolina, to Enter Into One or More Amendments to the Base Lease and Conveyance Agreement and the Installment Purchase and Use Agreement between Georgetown County and SCAGO Public Facilities Corp	Ordinance

ORDINANCE NO. 2017-09

AUTHORIZING GEORGETOWN COUNTY, SOUTH CAROLINA, TO ENTER INTO ONE OR MORE AMENDMENTS OR SUPPLEMENTS TO THE BASE LEASE AND CONVEYANCE AGREEMENT AND THE INSTALLMENT PURCHASE AND USE AGREEMENT EACH DATED DECEMBER 1, 2009, AND AS HERETOFORE AMENDED, BETWEEN GEORGETOWN COUNTY AND SCAGO PUBLIC FACILITIES CORPORATION FOR GEORGETOWN COUNTY, TO APPROVE THE FORM AND TERMS OF ONE OR MORE AMENDMENTS OR SUPPLEMENTS TO THE TRUST AGREEMENT DATED DECEMBER 1, 2009, AS HERETOFORE SUPPLEMENTED, BETWEEN SCAGO PUBLIC FACILITIES CORPORATION FOR GEORGETOWN COUNTY AND WELLS FARGO BANK, N.A., AS TRUSTEE, IN CONNECTION WITH THE ISSUANCE OF CERTAIN INSTALLMENT PURCHASE REFUNDING REVENUE BONDS (GEORGETOWN COUNTY PROJECT), IN ONE OR MORE SERIES, WITH APPROPRIATE SERIES DESIGNATIONS, AND TO ENTER INTO A FORWARD SALE AND DELIVERY, RATE LOCK OR TERM LOAN AGREEMENT RELATED TO THE FORWARD SALE AND DELIVERY OF SUCH BONDS; CONSENTING TO THE ISSUANCE OF SUCH INSTALLMENT PURCHASE REFUNDING REVENUE BONDS IN THE AGGREGATE PRINCIPAL AMOUNT OF NOT EXCEEDING $30,000,000; DELEGATING THE AUTHORITY TO THE COUNTY ADMINISTRATOR TO APPROVE AND DETERMINE CERTAIN MATTERS; AND OTHER MATTERS RELATING THERETO.

Enacted: May 9, 2017

BE IT ENACTED BY THE COUNTY COUNCIL OF GEORGETOWN COUNTY, SOUTH CAROLINA, AS FOLLOWS:

Section 1. Definitions. The terms defined in this Section for all purposes of this Ordinance shall have the respective meanings as set forth in this Section. The term:

"2009 Assignment Agreement" means the Assignment Agreement dated December 1, 2009, from the Corporation to the Trustee, as amended or supplemented from time to time.

"2009 Base Lease and Conveyance Agreement" means the Base Lease and Conveyance Agreement dated December 1, 2009, as amended by the First Amendment to Base Lease and Conveyance Agreement dated December 17, 2009, each between the County and the Corporation, and as may be further amended and supplemented from time to time.

"2009 Bonds" means the 2009A Bonds and the 2009B Bonds.

"2009A Bonds" means the SCAGO Public Facilities Corporation for Georgetown County Installment Purchase Refunding Revenue Bonds (Georgetown County Project), Series 2009A, dated December 1, 2009.

"2009B Bonds" means the SCAGO Public Facilities Corporation for Georgetown County Installment Purchase Revenue Bonds (Georgetown County Project) Series 2009B (Taxable Build America Bonds), dated December 17, 2009.

"2009 Facilities" shall have the meaning ascribed in the 2009 Installment Purchase and Use Agreement.

"2009 Installment Purchase and Use Agreement" means the Installment Purchase and Use Agreement dated December 1, 2009, as amended by the First Amendment to Installment Purchase and Use Agreement dated December 17, 2009, each between the County and the Corporation, and as may be further amended and supplemented from time to time.

"2009 Real Property" means the respective parcels of real property upon which certain improvements (including the Conveyed Improvements), fixtures and personal property are located and comprising a portion of the 2009 Facilities, situated in the County.

"2009 Trust Agreement" means the Trust Agreement dated December 1, 2009, as supplemented by the First Supplemental Trust Agreement dated December 17, 2009, each between the Corporation and the Trustee, pursuant to which the 2009 Bonds were issued.

"Bond Counsel" means McNair Law Firm, P.A.

"Bonds" means the SCAGO Public Facilities Corporation for Georgetown County Installment Purchase Refunding Revenue Bonds (Georgetown County Project), in one or more series, authorized to be issued pursuant to the 2009 Trust Agreement, as amended or supplemented as contemplated herein.

"Code" means the Internal Revenue Code of 1986, as amended from time to time, or any successor internal revenue laws of the United States enacted by the Congress of the United States in replacement thereof. References to the Code and sections of the Code include relevant applicable regulations, temporary regulations and proposed regulations thereunder and any successor provisions to those sections, regulations, temporary regulations or proposed regulations.

"Conveyed Improvements" shall have the meaning set forth in the 2009 Installment Purchase and Use Agreement.

"Corporation" means SCAGO Public Facilities Corporation for Georgetown County, a South Carolina non-profit corporation, and its successors and assigns.

"County" means Georgetown County, South Carolina.
"County Council" means the Georgetown County Council.

"Financial Advisor" means Compass Municipal Advisors, LLC.

"Forward Delivery Agreement" has the meaning specified in Section 2(f) hereof.

"Ordinance" means this Ordinance of the County Council.

"Purchaser/Underwriter" means the banks, financial institutions or other professionals selected by the Corporation based upon the advice and recommendation of the Financial Advisor to underwrite or purchase the Bonds.

"Trustee" means Wells Fargo Bank, its successors and assigns, or such other qualified financial institution as the Superintendent shall name based upon the advice of the County's Bond Counsel and Financial Advisor.

Section 2. Findings and Determinations. The County Council hereby finds and determines:

(a) Pursuant to Section 4-9-10, Code of Laws of South Carolina, 1976, as amended (the "S.C. Code"), the Council form of government was selected and the Council constitutes the governing body of the County.

(b) Section 4-9-30(2) of the S. C. Code empowers the County to acquire, lease, sell, or otherwise dispose of real and personal property.

(c) In December 2009, the County entered into the 2009 Base Lease and Conveyance Agreement and the 2009 Installment Purchase and Use Agreement under which:

(i) the County leased the 2009 Real Property and conveyed the Conveyed Improvements to the Corporation for the Base Lease Term (as defined in the 2009 Base Lease and Conveyance Agreement);

(ii) the Corporation issued and sold on December 1, 2009, the 2009A Bonds and issued and sold on December 17, 2009, the 2009B Bonds;

(iii) the Corporation used the proceeds from the sale of the 2009A Bonds for the purposes of refunding the $26,000,000 original principal amount SCAGO Public Facilities Corporation for

Georgetown County, Installment Purchase Revenue Bond (Georgetown County Project), Series 2008, and for such other purposes as are provided in the 2009 Installment Purchase and Use Agreement and the 2009 Trust Agreement; the corporation used the proceeds from the sale of the 2009B Bonds for the purposes of defraying the cost of acquiring, constructing, renovating, installing and equipping new and existing public facilities and for such other purposes as are provided in the 2009 installment Use and Purchase Agreement and the 2009 Trust Agreement.

(iv) the Corporation agreed to sell the 2009 Facilities to the County and, upon each payment by the County of Base Payments (as defined in the 2009 Installment Purchase and Use Agreement), title to an undivided interest in the 2009 Facilities equal to the percentage of the Purchase Price (as defined in the 2009 Installment Purchase and Use Agreement) represented by such payment would transfer from the Corporation to the County without further action by either party; and

(v) subject to an Event of Nonappropriation (as defined in the 2009 Installment Purchase and Use Agreement), the County would pay to the Trustee as assignee of the Corporation, Base Payments and Additional Payments (as defined in the 2009 Installment Purchase and Use Agreement) in such amounts and at such times as specified in the 2009 Installment Purchase and Use Agreement.

(d) Pursuant to the 2009 Trust Agreement and the 2009 Assignment Agreement, the Corporation's right to receive the Base Payments and certain other payments as provided in the 2009 Trust Agreement and the 2009 Installment Purchase and Use Agreement (with certain exceptions as provided therein), and rights in and to the 2009 Facilities (including the 2009 Real Property), the 2009 Installment Purchase and Use Agreement, the 2009 Base Lease and Conveyance Agreement and the property rights evidenced thereby in the 2009 Real Property, were assigned to the Trustee.

(e) To date, the County has made Base Payments under the 2009 Installment Purchase and Use Agreement which represents the transfer from the Corporation to the County of approximately 35.45% of the interest in the 2009 Facilities. The portion of the 2009 Facilities which have not yet been transferred to the County continue to be necessary in order for the County to properly provide adequate and appropriate public facilities to citizens and residents of the County. Administrative officials of the County, in consultation with the County's Financial Advisor and Bond Counsel, have thoroughly reviewed the plan of finance involving the potential refunding of all or a portion of the outstanding 2009 Bonds. In order to effect such refunding, the County has determined to authorize the preparation of the respective agreements described in this Ordinance and to enter into certain of such agreements.

(f) Based on current market conditions and projected savings, County Council finds that it may be in the best interest of the County to request the Corporation to refund all or a portion of the outstanding 2009 Bonds (the "Refunded Bonds") because a savings may be effected through such refunding. However, County Council has been advised by the Financial Advisor and the County's Bond Counsel that federal tax law prohibits the Refunded Bonds from being refunded prior to maturity with tax-exempt obligations until at least September 2019 and that, because current market conditions may change, it may be advantageous for the Corporation and the County to execute a forward sale and delivery agreement, rate lock agreement or term loan agreement with the Purchaser/Underwriter (a "Forward Delivery Agreement") in order to lock in an interest rate on the Bonds between the date of this Ordinance and September 2019, in anticipation of the actual sale and delivery of the Bonds occurring in September 2019 or afterwards, all as determined by the Authorized Officers upon advice of Bond Counsel and the Financial Advisor. County Council also recognizes that certain authority relating to such refunding is delegated to the Authorized Officers (as defined herein) through this Ordinance, including but not limited to the authority to determine the amount of the Refunded Bonds.

(g) It is now in the best interest of the County for the County Council to approve the issuance and sale by the Corporation of the Bonds in the principal amount of not exceeding $30,000,000, in one or more series issued as taxable or tax-exempt obligations. The proceeds of the Bonds shall be used by the Corporation for one or more purposes, including (i) refunding the Refunded Bonds; (ii) funding a subaccount of the Reserve Account of the Bond Fund established for the Bonds, if any, in an amount equal to the Reserve Requirement, if any, established therefor; and (iii) paying all or a portion of certain costs and expenses relating to the issuance of the Bonds, including the premiums for insurance or surety bonds applicable to the Bonds, if any, or costs associated with the Forward Delivery Agreement.

(h) Pursuant to an Ordinance adopted by the County Council on June 5, 2012, the County has adopted Written Procedures related to Tax-Exempt Debt.

Section 3. Approval of Issuance of Bonds and Plan of Finance. The County hereby ratifies, confirms and approves the Corporation, including its creation, existence, governance, purposes and activities, and the issuance and sale by the Corporation of its Bonds for the purposes of refunding the Refunded Bonds and other purposes described in Section 2(g) above, in substantial conformance to the documents described herein; provided, that the County Council acknowledges that it may be required to take additional action prior to the issuance of the Bonds, including but not limited to the adoption by County Council of a resolution confirming the findings and representations contained herein not more than one year prior to such issuance, upon the recommendation and advice of Bond Counsel.

For the purposes of the financing contemplated hereby, County Council does hereby approve the preparation and negotiation of one or more amendments or supplements (collectively, the "Amendments") to the 2009 Base Lease and Conveyance Agreement, 2009 Installment Purchase and Use Agreement, 2009 Trust Agreement and 2009 Assignment Agreement (collectively, the "Bond Documents"), in connection with the Corporation's issuance of the Bonds; provided, that in the event the Bonds are issued for the purpose of refunding all of the outstanding 2009 Bonds, the Bond Documents may be amended and restated in their entireties.

The County, for the purposes of the financing contemplated hereby, represents that it currently owns the 2009 Real Property and all of such 2009 Real Property is located within the geographic boundaries of the County.

The Bonds will be authenticated and delivered by the Trustee and the net proceeds from the sale of each series of Bonds to the Registered Owners of each series of Bonds (the "Registered Owners") will be disbursed in accordance with the provisions pursuant to the 2009 Trust Agreement, as amended, for the purposes set forth in Section 2 (g) above.

The County will accept title to the property financed by the 2009 Bonds and refinanced by the Bonds, including any additions to such property, when the 2009 Bonds and the Bonds are discharged.

Section 4. Approval of the Financing Documents and Refunding; Authorization to Execute. County Council hereby approves the execution and delivery by the County of the Amendments to which the County is a party, a letter of representations to the Bond Purchase Agreement, if any, between the Corporation and Purchaser/Underwriter (the "Bond Purchase Agreement"), a refunding trust agreement among the Corporation, the County and Wells Fargo Bank, N.A., as Escrow Agent (collectively, the "County Documents"), and, if determined to be advantageous, the Forward Delivery Agreement. The County Council hereby authorizes and directs the Chair and Vice Chair of County Council, the Clerk to County Council and the Administrator and the Finance Director of the County, or any of them acting alone

(each, an "Authorized Officer"), with the advice of the County's Financial Advisor and Bond Counsel, to determine the amount of the Refunded Bonds and whether satisfactory market conditions and debt service savings exist to proceed with the refunding of the Refunded Bonds and, if applicable, the prior execution of the Forward Delivery Agreement in anticipation thereof, and to approve the forms of and to execute and deliver on behalf of the County the County Documents, and hereby authorizes the Authorized Officers to take such further action and to prepare, disseminate, execute and deliver such additional documents (including bid specifications, subscription documents and directions to purchase escrow securities and redeem the Refunded Bonds) as may be necessary to effect the execution and delivery of the County Documents in accordance with the terms and conditions therein set forth, and the transactions contemplated hereby and thereby. The actions of such Authorized Officers in executing and/or delivering any of such documents is dispositive evidence of the approval thereof by such signatory.

With the advice of the County's Financial Advisor and Bond Counsel, the Bonds shall be sold by the Corporation in a public offering or in a private offering or private placement transaction, and such sale may be conducted to or with the assistance of the Purchaser/Underwriter. In connection therewith, the Authorized Officers are hereby authorized and directed to take such actions in connection with the preparation, publication and/or distribution of information, offering documents (and to "deem final" preliminary versions of such offering documents for purposes of complying with the requirements set forth in Rule 15c2-12 of the Securities and Exchange Commission, promulgated under the Securities Exchange Act of 1934, as amended), private placement memoranda or requests for proposals (as applicable), to solicit interest and receive offers from financial institutions and institutional investors to purchase the Bonds in a private offering, and to accept such offer which is in the best interest of the Corporation and the County.

The Authorized Officers are further authorized and directed, with the advice of the County's Financial Advisor and Bond Counsel, to enter into any investment agreements, repurchase agreements or forward delivery agreements or other contracts and documents (including but not limited to terminations of existing repurchase and forward delivery agreements or liquidation directions) and to take all actions necessary or desirable (including but not limited to the engagement of investment advisors and representatives and the registration of the County with federal or state regulatory authorities) in connection with the investment of funds presently on deposit or to be deposited in the future in various funds and accounts established under the Bond Documents, as amended pursuant to the Amendments, with respect to the 2009 Bonds or the Bonds, or to execute and deliver any documents necessary in connection with the purchase of a bond insurance policy or surety bond, if any, with respect to the Bonds. The authorization conferred herein shall extend to and include, but not be limited to, the documents and certificates reasonably expected to be necessary for the closing of the refunding transaction, including, but not limited to, deeds or other instruments of conveyance, a general certificate of the County, a certificate as to the official statement, a refunding trust agreement, a continuing disclosure undertaking, any designation of County representatives, and such other documents required to be executed in connection with the bond insurance policy or surety bond, if any, with respect to the Bonds.

Section 5. Federal Tax Covenant. The County hereby covenants and agrees with the Holders of the Bonds issued as tax-exempt obligations (the "Tax-Exempt Bonds") that it will not take any action which will, or fail to take any action which failure will, cause interest on the Tax-Exempt Bonds to become includable in the gross income of the bondholders thereof for federal income tax purposes pursuant to the provisions of the Code and regulations promulgated thereunder in effect on the date of original issuance of the Tax-Exempt Bonds and that no use of the proceeds of the Tax-Exempt Bonds shall be made which, if such use had been reasonably expected on the date of issue of the Tax-Exempt Bonds, would have caused the Tax-Exempt Bonds to be "arbitrage bonds," as defined in the Code; and to that end the County hereby shall:

(a) comply with the applicable provisions of Section 103 and Sections 141 through 150 of the Code and any regulations promulgated thereunder so long as the Tax-Exempt Bonds are Outstanding;

(b) establish such funds, make such calculations and pay such amounts, if necessary, in the manner and at the times required in order to comply with the requirements of the Code relating to required rebate of certain amounts to the United States; and

(c) make such reports of such information at the times and places required by the Code.

Section 6. Professionals. The County Council hereby retains McNair Law Firm, P.A., as Bond Counsel and Compass Municipal Advisors, LLC, as Financial Advisor, in connection with the issuance of the Bonds. The Administrator is authorized to execute such contracts, documents or engagement letters as may be necessary and appropriate to effectuate said engagements. The Administrator is further authorized, upon the advice of Bond Counsel or Financial Advisor, to hire additional professionals needed to effectuate the issuance of the Bonds and to execute such contracts, documents or engagement letters as may be necessary and appropriate to effectuate said engagements.

Section 7. Severability. If any section, phrase, sentence, or portion of this Ordinance is for any reason held invalid or unconstitutional by any court of competent jurisdiction, such portion shall be deemed a separate, distinct, and independent provision, and such holding shall not affect the validity of the remaining portions thereof.

Section 8. Repeal of Conflicting Ordinances. All orders, ordinances and parts thereof, procedural or otherwise, in conflict herewith or the proceedings authorizing the execution and delivery of any of the agreements approved by this Ordinance are, to the extent of such conflict, hereby repealed.

Adopted this _____ day of _____, 2017.

GEORGETOWN COUNTY, SOUTH CAROLINA

_____
Chair, County Council

(SEAL)

ATTEST:

_____
Clerk, County Council

First Reading:	April 11, 2017 (Tentative)
Second Reading:	April 25, 2017 (Tentative)
Public Hearing:	May 9, 2017 (Tentative)
Third Reading:	May 9, 2017 (Tentative)

Item Number:	8.a
Meeting Date:	5/9/2017
Item Type:	APPOINTMENTS TO BOARDS AND COMMISSIONS

AGENDA REQUEST FORM
GEORGETOWN COUNTY COUNCIL

DEPARTMENT: County Council

ISSUE UNDER CONSIDERATION:
Georgetown County Library Board

CURRENT STATUS:
Pending

POINTS TO CONSIDER:
There is currently a vacancy on the Georgetown County Library Board (representing Council District 7). Council Chairman Johnny Morant would like to nominate Ms. Carlethia Rudolph for appointment to fill this seat on the Library Board.

If appointed, Ms. Rudolph will complete an unexpired term of service that will end on March 15, 2019.

Ms. Rudolph's application is provided for Council's consideration.

FINANCIAL IMPACT:
n/a

OPTIONS:
1. Ratify the appointment of Ms. Carlethia Rudolph to the Georgetown County Library Board.
2. Do not ratify this appointment.

STAFF RECOMMENDATIONS:
Ratify the appointment of Ms. Carlethia Rudolph to the Georgetown County Library Board (representing Council District 7).

ATTACHMENTS:

Description	Type
Library Board Application_C Rudolph	Backup Material

QUESTIONAIRE FOR
BOARD / COMMISSION
PLEASE PRINT

[For all yes/no questions please circle appropriate answer]

Name of Board / Commission to which you wish to be appointed / reappointed:

_____ Airport Commission
_____ Alcohol & Drug Abuse Commission
_____ Assessment Appeals Board
_____ ATAX Commission
_____ Building Codes Board of Appeals
_____ Coastal Carolina University Advisory Board
_____ Economic Development Alliance Board
_____ Fire District 1 Board
_____ Historical Commission
✓ Library Board
_____ Midway Fire-Rescue Board
_____ Parks & Recreation Commission
_____ Planning Commission
_____ Sheriff Advisory Board
_____ Tourism Management Commission
_____ Zoning Appeals Board

Name: Carlethia Moultrie Rudolph
[First] [Middle/Maiden] [Last]

Home Address: 94 Ford Rd Pawleys Isl SC 29585

Home Phone: 843-237-8118 Work Phone: _____ Cell Phone: _____

Email Address: moultrie1carlethia@gmail.com

Permanent resident of Georgetown County? (YES) / NO Registered Voter in Georgetown County? (YES) / NO

Occupation: Retired Present Employer: Georgetown County
[If retired, most recent employer]

Employer Address: _____

Please indicate which best describes the level of education you last completed:

_____ Some High School _____ High School Graduate/GED _____ Some College ✓ College Graduate

Professional Degree *(please specify)* BA / Management

Do you serve on any other state, county, city, or community boards/commissions, or hold an elected office? Yes / (No)

[If yes, please list]: _____

Do you have any interest in any business that has, is, or will do business with the County of Georgetown? Yes / (No)

[If yes, please list]: _____

Do you have a potential conflict of interest or reason to routinely abstain from voting on this board /commission? Yes / (No)

[If yes, please list]: _____

Summary of Qualifications or Experience that you feel would beneficial to this board/commission:
Managed daily operation + supervised 14 employees at busy library branch for 25 ½ years.

I hereby agree to attend the stated and called meetings of this entity to which I may be appointed and further agree that should I miss *three (3) consecutive meetings* or, *half the meetings within a six-month period,* I will resign my appointment.

C. M. Rudolph 4/17/17
Applicant Signature Date

NOTE: Applications for service on Georgetown County Boards and Commissions remain on file for 2 years. If you have not been appointed to serve on a board/commission within that that timeframe you may re-submit your application. Please note that information provided in this application may be subject to SC Freedom of Information disclosure.

[Please return completed form to Theresa Floyd, Clerk to Council, 716 Prince Street, Georgetown, SC 29440]

(Revised 11-16)

Item Number:	9.a
Meeting Date:	5/9/2017
Item Type:	RESOLUTIONS / PROCLAMATIONS

AGENDA REQUEST FORM
GEORGETOWN COUNTY COUNCIL

DEPARTMENT: Emergency Services

ISSUE UNDER CONSIDERATION:
Proclamation 2017-06 - To proclaim May 21-27, 2017 as "Emergency Medical Services (EMS) Week" in Georgetown County. This year's theme for EMS Week is, "EMS Strong: "Always in Service".

CURRENT STATUS:
n/a

POINTS TO CONSIDER:
1) Emergency Medical Services (EMS) is a vital public service.
2) EMS members are ready to provide lifesaving care to those in need 24 hours a day, seven days a week.
3) Access to quality emergency care dramatically improves the survival and recovery rate of those who experience sudden illness or injury.
4) EMS members, whether career or volunteer, engage in thousands of hours of specialized training and continuing education to enhance their lifesaving skills.
5) It is appropriate to recognize the value and the accomplishments of EMS providers by designating Emergency Medical Services Week. The Emergency Medical Services system consists of emergency physicians, emergency nurses, emergency medical technicians, paramedics, firefighters, first responders, educators, administrators and others.

FINANCIAL IMPACT:
n/a

OPTIONS:
1) Adopt Proclamation 2017-06 proclaiming May 21-27, 2017 as "National Emergency Medical Services Week" in Georgetown County.
2) Do not adopt Proclamation.

STAFF RECOMMENDATIONS:
Adopt Proclamation 2017-06 proclaiming May 21-27, 2017 as "Emergency Medical Services Week" in Georgetown County.

ATTORNEY REVIEW:
No

ATTACHMENTS:

Description	Type
Proclamation No 2017-06 Declaring EMS Week	Resolution Letter

Proclamation

STATE OF SOUTH CAROLINA	)	**MAY 21-27, 2017**
	)	**EMERGENCY MEDICAL SERVICES WEEK**
COUNTY OF GEORGETOWN	)	

To designate the Week of May 21-27, 2017, as Emergency Medical Services Week

WHEREAS, emergency medical services is a vital public service; and

WHEREAS, the members of emergency medical services teams are ready to provide lifesaving care to those in need 24 hours a day, seven days a week; and

WHEREAS, access to quality emergency care dramatically improves the survival and recovery rate of those who experience sudden illness or injury; and

WHEREAS, the emergency medical services system consists of emergency physicians, emergency nurses, emergency medical technicians, paramedics, firefighters, educators, administrators and others; and

WHEREAS, the members of emergency medical services teams, whether career or volunteer, engage in thousands of hours of specialized training and continuing education to enhance their lifesaving skills; and

WHEREAS, it is appropriate to recognize the value and the accomplishments of emergency medical services providers by designating Emergency Medical Services Week; and

WHEREAS, the Georgetown County Council and the Emergency Medical Services of Georgetown County are reaching out to citizens of Georgetown County to recognize Emergency Medical Services workers for their selfless dedication to providing care to the sick and injured.

WHEREAS, the theme for EMS Week shall be "EMS Strong: "Always in Service".

NOW THEREFORE BE IT RESOLVED that the Georgetown County Council, along with the Emergency Medical Services of Georgetown County, proclaim the week of May 21-27, 2017, as

"EMERGENCY MEDICAL SERVICES WEEK"

DONE, RATIFIED, AND ADOPTED THIS 9th DAY OF May 2017.

_____

Johnny Morant, Chairman
Georgetown County Council

ATTEST:

_____

Theresa E. Floyd
Clerk to Council

Item Number:	9.b
Meeting Date:	5/9/2017
Item Type:	RESOLUTIONS / PROCLAMATIONS

AGENDA REQUEST FORM
GEORGETOWN COUNTY COUNCIL

DEPARTMENT: County Administrator

ISSUE UNDER CONSIDERATION:
Resolution No. 2017-07 - Authorizing the Execution of an Agreement and Participation in the Horry County Home Consortium

CURRENT STATUS:
The US Congress enacted the Cranston-Gonzales National Affordable Housing Act in 1990, which created the Home Investments Partnerships Program that provides funds to state and local governments for acquisition, rehabilitation, and new construction of affordable housing and tenant-based systems.

POINTS TO CONSIDER:
Under the Act, an organization of geographically contiguous units of general local government may act as a single unit of general local government for purposes of receiving and administering HOME funds.

The Act requires local governments acting as a Consortium to submit a single Consolidated Plan that covers the entire geographical area encompassed by the Consortium Members as part of the eligibility requirements for HOME funds (Section 91.15 (b) of the Consolidated Final Rule).

Resolution No. 2017-07 authorizes Georgetown County's participation in this partnership and execution of the "Intergovernmental Agreement Establishing the Horry County Home Consortium", and authorizing the *HOME Consolidated Plan 2018-2022*, which will guide the funding priority of needs within the Horry County HOME Consortium planning area.

OPTIONS:
1. Adopt Resolution No. 2017-07 Authorizing the Execution of an Agreement to Participate in the Horry County Home Consortium.
2. Do not adopt Resolution No. 2017-07.

STAFF RECOMMENDATIONS:
Recommendation to adopt Resolution No. 2017-07 Authorizing the Execution of an Agreement to Participate in the Horry County Home Consortium.

ATTACHMENTS:

	Description	Type
	Resolution No 2017-07 Horry County HOME Consortium	Resolution Letter
	Horry County HOME Consortium Intergovernmental Agreement	Backup Material

RESOLUTION 2017-07
AUTHORIZING EXECUTION OF AN AGREEMENT TO PARTICIPATE IN THE HORRY COUNTY HOME CONSORTIUM

WHEREAS, the Congress of the United States has enacted the Cranston-Gonzales National Affordable Housing Act of 1990 (hereinafter the "Act") which created the HOME Investment Partnerships Program (hereinafter the "HOME Program") to provide funds to states and local governments for affordable housing assistance with the flexibility to decide what kind of housing assistance or mix of housing assistance is most appropriate for local needs; and

WHEREAS, the U.S. Department of Housing and Urban Development (hereinafter "HUD") subsequently issued regulations set forth in 24 CFR Part 92 allowing units of general local government to enter into mutual cooperation agreements to form consortia for the purpose of obtaining funding from the HOME Program; and

WHEREAS, Georgetown County has affordable housing needs; and

WHEREAS, Georgetown County desires to increase affordable housing opportunities for its present and future residents, particularly for very low-income persons; and

WHEREAS, Georgetown County desires to enter into affordable housing development activities which are directed toward the above general purposes, and for those reasons, wishes to seek such federal funding as may be available to it pursuant to the Act; and

WHEREAS, Georgetown County desires to enter into the affordable housing activities and has determined that joint action with other units of local governments that choose to participate in accordance with the "InterGovernmental Agreement Establishing the Horry County HOME Consortium FY 2018-2020", the terms of which are incorporated by reference and such relevant HUD regulations and requirements as may now or hereafter be in effect would benefit Georgetown County; and

WHEREAS, Georgetown County agrees to automatically renew Consortium participation in successive qualification periods of three fiscal years according to the terms of the "Horry County HOME Consortium Intergovernmental Agreement; and

BE IT FURTHER RESOLVED, that Georgetown County Council hereby authorizes Sel Hemingway, the Administrator of Georgetown County, to sign the "Inter-Governmental Agreement Establishing the Horry County HOME Consortium FY 2018- 2020" on behalf of Georgetown County, as well as all other documents necessary to form the Consortium and to carry out and fulfill its purposes.

So Shall It be, this 9th Day of May, 2017.

_____
Johnny Morant, Chairman
Georgetown County Council

Attest:

_____
Theresa E. Floyd,
Clerk to Council

THE HORRY COUNTY HOME CONSORTIUM
INTERGOVERNMENTAL AGREEMENT

This Agreement is entered into and made effective July 1, 2018, by and among Horry County, as lead entity; and the County of Georgetown, the County of Williamsburg, being political subdivisions of the State of South Carolina and Title 6, Chapter 7 of the South Carolina Code of Laws, 1976, as amended, and the Town of Aynor, the City of Loris, the Town of Atlantic Beach, the City of Conway, the City of Myrtle Beach, the City of North Myrtle Beach, the Town of Surfside Beach, the City of Georgetown, the Town of Andrews, the Town of Pawleys Island, the Town of Greeleyville, the Town of Hemingway, the Town of Kingstree, the Town of Lane, and the Town of Stuckey, being municipal corporations organized and existing under Articles VII and VIII of the State of South Carolina and Title 5 of the South Carolina Code of Laws, 1976, as amended, for the purpose of forming the *Horry County HOME Consortium* (hereinafter, "HCHC").

WHEREAS, the United States Congress enacted the Cranston-Gonzales National Affordable Housing Act of 1990 and federal regulations have been adopted pursuant thereto (hereinafter collectively referred to as the "Act"); and

WHEREAS, Title II of the Act creates the Home Investment Partnerships Program (hereinafter "HOME") that provides funds to state and local governments for acquisition, rehabilitation, new construction of affordable housing and tenant-based systems; and

WHEREAS, under the Act, an organization of geographically contiguous units of general local government may act as a single unit of general local government for purposes of receiving and administering HOME funds and carrying out the purpose of the Act; and

WHEREAS, the Act requires local governments acting as a Consortium to submit a single Consolidated Plan that covers the entire geographical area encompassed by the Consortium Members as part of the eligibility requirements for HOME funds section 91.15 (b) of the Consolidated final rule; and

WHEREAS, the *Horry County Consortium HOME Consolidated Plan 2018-2022*, will guide the needs and funding priority of funding within the Horry County HOME Consortium planning area;

WHEREAS, the signatories to this Agreement desire to and intend to establish the *"Horry County HOME Consortium"* (hereinafter "HCHC" and/or the "consortium") which shall be comprised of the counties and municipalities which have affixed their signatures hereto.

NOW, THEREFORE, in consideration of the mutual promises, covenants and agreements contained herein, the nature and sufficiency of which are deemed sufficient, the parties to this Agreement, being the urban entitlement of Horry County (which includes the Cities of Myrtle Beach and Conway), the County of Georgetown, the County of Williamsburg, and, the Town of Aynor, the City of Loris, the Town of Atlantic Beach, the City of North Myrtle Beach, the Town of Surfside Beach, the City of

Georgetown, the Town of Andrews, the Town of Pawleys Island, the Town of Greeleyville, the Town of Hemingway, the Town of Kingstree, the Town of Lane, and the Town of Stuckey, do agree as follows:

SECTION 1 – DEFINITIONS

The words and phrases used herein shall have the meaning provided at 42 U.S.C. §12704 AND 24 CFR § 92.2.

SECTION 2 – PURPOSE OF THIS AGREEMENT

The purpose of this Agreement is to fulfill the documentation requirement of 24 CFR §92.101(a)(2) (ii).

This Agreement is executed to form "one legally binding cooperative agreement among" the "Members authorizing one member unit of general local government to act in a representative capacity for all member units of general local government" and "providing that the representative member assumes overall responsibility for ensuring that the consortium's HOME Program is carried out in compliance with the requirements of 24 CFR Part 92. "

The Members intend to use funds allocated under the HOME Program to provide affordable rental and home ownership housing through acquisition, rehabilitation, and new construction of housing and tenant-based rental assistance.

SECTION 3 – AUTHORIZATION TO ENTER INTO THIS AGREEMENT

The parties to this Agreement are authorized to enter into this Agreement as "units of general local government" as the term is defined at 42 U.S.C. 12704(I) and are hereinafter referred to as "Members" of the Consortium to be known as the "Horry County HOME Consortium" (hereinafter, "HCHC").

Each member of the Consortium has caused an authorizing resolution to be executed by its appropriate and authorized official authorizing the execution of this Agreement for and on behalf of the member, its governing body, successors and assigns for the purposes provided herein as set forth in the Cranston-Gonzales National Affordable Housing Act, 42 U.S.C. § 12703.

A copy of each member's authorizing resolution is affixed hereto and is incorporated by reference herein as if set forth verbatim. Only those bodies for whom an authorizing resolution has been duly authorized, executed, and affixed hereto shall be deemed a member of the HCHC.

SECTION 4 – MEMBERS OF THE CONSORTIUM

The county, town, and city Members to this Agreement are geographically contiguous units of general local government.

The county, town, and city Members enter into this Agreement and bind themselves, their successors, and assigns, to act jointly as the "Horry County HOME Consortium". HCHC exists for the exclusive purpose of administering the affordable housing program known as the HOME Investment Partnerships Program described at Title II of the Cranston-Gonzales National Affordable Housing Act, as amended, 42 U.S.C. 12701 et seq.

Each member shall comply with the HOME Program as now enacted and hereafter amended. The Lead Entity, as provided herein, has overall responsibility for the Consortium's HOME Program and compliance with the program requirements. The Lead Entity, Horry County, will operate under the *Horry County HOME Consortium Consolidated Plan 2018-2022*. The Consolidated Plan will be updated as required by HUD.

No Member shall object to or obstruct the implementation of the approved Consolidated Plan.

The Lead Entity is authorized to amend this Agreement to add new Members to this Agreement by written addendum. All provisions of this Agreement shall apply and govern any new member's participation in the HCHC. The addition of a new Member does not change the term or qualification period of this Agreement.

SECTION 5 – INTERGOVERNMENTAL AGREEMENT

The signatories to this Agreement, their successors, and assigns, agree to comply with all regulations successfully promulgated by the United States Department of Housing and Urban Development, 42 U.S.C. 12701 et seq. pertaining to the HOME Program requirements now in existence and which may be amended from time to time including provisions relating to program eligibility. Each member agrees to participate to the maximum extent possible including participation in the funding benefits made available by HUD through the HOME Program to create or improve affordable housing opportunities for their low and moderate income citizens.

SECTION 6 – LEAD ENTITY

The County of Horry, South Carolina was duly authorized by its governing body to accept the designation of "lead entity" and is authorized to act in a representative capacity for the Members of the HCHC related exclusively to the purposes of the administration of the HOME Program.

Horry County, upon approval of this Agreement by HUD, shall cause all operational and substantive functions to be performed necessary to the lawful implementation and operation of the HOME Program including but not limited to the production and filing of a Consolidated Plan and all reports and other documents required by the United States Department of Housing and Urban Development ("HUD") including but not limited to required submittals, documentation, and certification requirements provided for in the Act and its regulations.

SECTION 7 – DUTIES OF HORRY COUNTY

Horry County is hereby designated and authorized to administer the activities of the HCHC. Additionally, Horry County Council shall act as the governing body of the HCHC. The HCHC Members acknowledge that Horry County has sufficient administrative capacity and relevant experience to administer the HOME Program.

As Lead Entity, Horry County will assume overall responsibility for ensuring compliance with all HOME requirements through the oversight and coordination of services on behalf of the Consortium Members. Those activities include:

1. Monitoring the performance of all entities to ensure HOME program funds are compliant with all federal laws and programmatic requirements of the HOME program.
2. Managing day-to-day operations of the Consortium's participation in the HOME program
3. Coordinating project solicitation and selection process.
4. Ensure compliance with Federal procurement requirements including those outlined in supercircular 2 CFR part 200.

SECTION 8 – DUTIES OF MEMBERS

Each member agrees to cooperate in undertaking or assisting in undertaking housing assistance activities for the HOME Program. Members are prohibited from withdrawing from the HCHC and/or this Agreement during the initial three-year term or qualification period. Each Member agrees to affirmatively further fair housing. Each Member agrees to approve any amendment to this Agreement that incorporates future changes necessary to meet the requirements for consortia agreement in subsequent qualification periods.

Each signatory to this Agreement covenants and agrees to strict adherence to the program descriptions as approved and to all assurances and certifications provided, including agreement to take all actions necessary to assure compliance with Horry County's certification under the Fair Housing Act; Executive Order 11063 (Equal Opportunity in Housing) and Title VI of the Civil Rights Act of 1964, the Uniform Relocation Assistance, Real Property Acquisitions Policy Act of 1970, and the Davis-Bacon Act at 40 USC 276a, et seq. Horry County shall not provide or cause to be provided HOME funds for activities in or support of any cooperating jurisdiction that does not affirmatively further fair housing within its own jurisdiction or activities that impede Horry County's actions to comply with affirmatively further fair housing activities.

Each member, as required by the Consolidated Plan final rule at 24CFR 91.402(a), must be on the same program year for the CDBG, HOME, ESG and HOPWA programs. The HCHC program year begins July 1st and ends June 30th, annually.

SECTION 9 – EFFECTIVE DATE, TERM, RENEWAL AND TERMINATION

This Agreement shall be for the initial term of Federal fiscal years 2018, 2019, and 2020, and shall remain in effect at least until the HOME funds from Federal fiscal years 2018, 2019, and 2020 are expended on eligible activities.

This agreement shall automatically be renewed for the Consortium's participation in successive qualification periods of three federal fiscal years each. No later than the date specified by HUD's consortia designation notice or HOME Consortia web page, the Lead Entity shall notify each Consortium Member in writing of its right to decide not to participate in the Consortium for the next qualification period and the Lead Entity shall send a copy of each notification to the HUD Field Office.

If a Consortium Member decides not to participate in the Consortium for the next qualification period, the Consortium Member shall notify the Lead Entity, and the Lead Entity shall notify the HUD Field Office, before the beginning of the new qualification period. Before the beginning of each new qualification period, the Lead Entity shall submit to the HUD Field Office a statement of whether or not

any amendments have been made to this agreement, a copy of each amendment to this agreement, and, if the Consortium's Membership has changed, the state certification required under 24 C.F.R. § 92.101(a)(2)(i). The Consortium shall adopt any amendments to this agreement that are necessary to meet HUD requirements for Consortium agreements in successive qualification periods.

The automatic renewal of the agreement will be void if: the Lead Entity fails to notify a Consortium member or the HUD field office as required under this automatic renewal provision or the Lead Entity fails to submit a copy of each amendment to this agreement as required under this automatic renewal provision.

Though this Agreement may be amended, no member may withdraw from the Agreement while the Agreement remains in effect. A member desiring to terminate the Agreement and its participation in the HCHC may do so by giving no less than six months prior written notice. The notice must be sent to the other Members at the addresses appearing on the signature page and the notice must specify the effective date of intended termination. Each member agrees that in order to be relieved from the terms of this Agreement, it must notify Horry County in writing of its intent not to participate in a renewal period on or before the date specified by HUD.

SECTION 10 – CONFLICTS OF INTEREST

No member of the governing body of any member unit of local government or any other public official of the Lead Entity or any other public official who exercises any responsibilities or functions with respect to any HCHC activity during his tenure or for one year thereafter shall have any interest, direct or indirect, in any contract in connection with any HCHC activity, or any contract in connection with any HCHC activity.

SECTION 11– EXECUTION

The parties hereto have executed this Agreement as of the date first written above. This Agreement may be executed in multiple counterparts; each of which shall be deemed to be an original, but all which shall constitute one and the same instrument, and in making proof of this Agreement, it shall not be necessary to produce or account for more than one such counterpart.

THE UNITED STATES DEPARTMENT OF HOUSING
AND URBAN DEVELOPMENT

AND

THE COUNTY OF GEORGETOWN, THE COUNTY OF WILLIAMSBURG, THE COUNTY OF HORRY, THE CITY OF CONWAY, THE CITY OF MYRTLE BEACH, THE TOWN OF AYNOR, THE CITY OF LORIS, THE TOWN OF ATLANTIC BEACH, THE CITY OF NORTH MYRTLE BEACH, THE TOWN OF SURFSIDE BEACH, THE CITY OF GEORGETOWN, THE TOWN OF ANDREWS, THE TOWN OF PAWLEYS ISLAND, THE TOWN OF GREELEYVILLE, THE TOWN OF HEMMINGWAY, THE TOWN OF KINGSTREE, THE TOWN OF LANE, THE

TOWN OF STUCKEY, THE TOWN OF BRIARCLIFFE ACRES

AN INTERGOVERMENTAL AGREEMENT ESTABLISHING
THE HORRY COUNTY HOME CONSORTIUM

EXECUTED this _____ day of June, 2017.

_____
THE COUNTY OF GEORGETOWN
Sel Hemmingway, County Administrator
Post Office Drawer 421270
Georgetown, SC 29440
Telephone: (843)545-3006
Fax: (843)545-3127

_____
Witness

Item Number:	10.a
Meeting Date:	5/9/2017
Item Type:	THIRD READING OF ORDINANCES

AGENDA REQUEST FORM
GEORGETOWN COUNTY COUNCIL

DEPARTMENT: County Council

ISSUE UNDER CONSIDERATION:
Ordinance No. 2017-09 - Authorizing Georgetown County, South Carolina, to Enter Into One or More Amendments or Supplements to the Base Lease and Conveyance Agreement and the Installment Purchase and Use Agreement Each Dated December 1, 2009, and as Heretofore Amended, Between Georgetown County and SCAGO Public Facilities Corporation for Georgetown County, to Approve the Form and Terms of One or More Amendments or Supplements to the Trust Agreement Dated December 1, 2009, as Heretofore Supplemented, Between SCAGO Public Facilities Corporation for Georgetown County and Wells Fargo Bank, N.A. as Trustee, in Connection with the Issuance of Certain Installment Purchase Refunding Revenue Bonds (Georgetown County Project), in One or More Series, With Appropriate Series Designations, and to Enter Into a Forward Sale and Delivery, Rate Lock or Term Loan Agreement Related to the Forward Sale and Delivery of Such Bonds; Consenting to the Issuance of Such Installment Purchase Refunding Revenue Bonds in the Aggregate Principal Amount of Not Exceeding $30,000,000; Delegating the Authority to the County Administrator to Approve and Determine Certain Matters; and Other Matters Relating Thereto.

CURRENT STATUS:
Pending

POINTS TO CONSIDER:
Georgetown County, Installment Purchase Revenue Bond (Georgetown County Project), Series 2008, the purposes for which are provided in the 2009 Installment Purchase and Use Agreement and the 2009 Trust Agreement between Georgetown County and SCAGO Public Facilities Corporation. The Corporation used the proceeds from the sale of the 2009B Bonds for the purposes of defraying the cost of acquiring, constructing, renovating, installing and equipping new and existing public facilities, as well as for such other purposes as are provided in the 2009 installment Use and Purchase Agreement and the 2009 Trust Agreement.

Based on current market conditions and projected savings, it may be in the best interest of the County to request the Corporation to refund all or a portion of the outstanding 2009 Bonds (the “Refunded Bonds”) because a savings may be effected through such refunding. However, the County has been advised by the Financial Advisor and the County’s Bond Counsel that federal tax law prohibits the Refunded Bonds from being refunded prior to maturity with tax-exempt obligations until at least September 2019 and that, because current market conditions may change, it may be advantageous for the Corporation and the County to execute a forward sale and delivery agreement, rate lock agreement or term loan agreement with the Purchaser/Underwriter in order to lock in an interest rate on the Bonds between the date of this Ordinance and September 2019, in anticipation of the actual sale and delivery of the Bonds occurring in September 2019 or afterwards, all as determined by the Authorized Officers upon advice of Bond Counsel and the Financial Advisor.

Certain authority relating to such refunding is delegated to the Authorized Officers (as defined herein) through the proposed Ordinance, including but not limited to the authority to determine the amount of the Refunded Bonds

the Refunded Bonds.

It is now in the best interest of the County for the County Council to approve the issuance and sale by the Corporation of the Bonds in the principal amount of not exceeding $30,000,000, in one or more series issued as taxable or tax-exempt obligations. The proceeds of the Bonds shall be used by the Corporation for one or more purposes, including (i) refunding the Refunded Bonds; (ii) funding a subaccount of the Reserve Account of the Bond Fund established for the Bonds, if any, in an amount equal to the Reserve Requirement, if any, established therefor; and (iii) paying all or a portion of certain costs and expenses relating to the issuance of the Bonds, including the premiums for insurance or surety bonds applicable to the Bonds, if any, or costs associated with the Forward Delivery Agreement.

OPTIONS:

1. Adoption of Ordinance No. 2017-09.
2. Decline adoption of Ordinance No. 2017-09.

STAFF RECOMMENDATIONS:

Recommendation for the adoption of Ordinance No. 2017-09 authorizing Georgetown County, South Carolina, to Enter Into One or More Amendments or Supplements to the Base Lease and Conveyance Agreement and the Installment Purchase and Use Agreement Each Dated December 1, 2009, between Georgetown County and SCAGO Public Facilities Corporation.

ATTACHMENTS:

	Description	Type
	Ordinance No. 2017-09 Authorizing Georgetown County, South Carolina, to Enter Into One or More Amendments to the Base Lease and Conveyance Agreement and the Installment Purchase and Use Agreement between Georgetown County and SCAGO Public Facilities Corp	Ordinance

ORDINANCE NO. 2017-09

AUTHORIZING GEORGETOWN COUNTY, SOUTH CAROLINA, TO ENTER INTO ONE OR MORE AMENDMENTS OR SUPPLEMENTS TO THE BASE LEASE AND CONVEYANCE AGREEMENT AND THE INSTALLMENT PURCHASE AND USE AGREEMENT EACH DATED DECEMBER 1, 2009, AND AS HERETOFORE AMENDED, BETWEEN GEORGETOWN COUNTY AND SCAGO PUBLIC FACILITIES CORPORATION FOR GEORGETOWN COUNTY, TO APPROVE THE FORM AND TERMS OF ONE OR MORE AMENDMENTS OR SUPPLEMENTS TO THE TRUST AGREEMENT DATED DECEMBER 1, 2009, AS HERETOFORE SUPPLEMENTED, BETWEEN SCAGO PUBLIC FACILITIES CORPORATION FOR GEORGETOWN COUNTY AND WELLS FARGO BANK, N.A., AS TRUSTEE, IN CONNECTION WITH THE ISSUANCE OF CERTAIN INSTALLMENT PURCHASE REFUNDING REVENUE BONDS (GEORGETOWN COUNTY PROJECT), IN ONE OR MORE SERIES, WITH APPROPRIATE SERIES DESIGNATIONS, AND TO ENTER INTO A FORWARD SALE AND DELIVERY, RATE LOCK OR TERM LOAN AGREEMENT RELATED TO THE FORWARD SALE AND DELIVERY OF SUCH BONDS; CONSENTING TO THE ISSUANCE OF SUCH INSTALLMENT PURCHASE REFUNDING REVENUE BONDS IN THE AGGREGATE PRINCIPAL AMOUNT OF NOT EXCEEDING $30,000,000; DELEGATING THE AUTHORITY TO THE COUNTY ADMINISTRATOR TO APPROVE AND DETERMINE CERTAIN MATTERS; AND OTHER MATTERS RELATING THERETO.

Enacted: May 9, 2017

BE IT ENACTED BY THE COUNTY COUNCIL OF GEORGETOWN COUNTY, SOUTH CAROLINA, AS FOLLOWS:

Section 1. Definitions. The terms defined in this Section for all purposes of this Ordinance shall have the respective meanings as set forth in this Section. The term:

"2009 Assignment Agreement" means the Assignment Agreement dated December 1, 2009, from the Corporation to the Trustee, as amended or supplemented from time to time.

"2009 Base Lease and Conveyance Agreement" means the Base Lease and Conveyance Agreement dated December 1, 2009, as amended by the First Amendment to Base Lease and Conveyance Agreement dated December 17, 2009, each between the County and the Corporation, and as may be further amended and supplemented from time to time.

"2009 Bonds" means the 2009A Bonds and the 2009B Bonds.

"2009A Bonds" means the SCAGO Public Facilities Corporation for Georgetown County Installment Purchase Refunding Revenue Bonds (Georgetown County Project), Series 2009A, dated December 1, 2009.

"2009B Bonds" means the SCAGO Public Facilities Corporation for Georgetown County Installment Purchase Revenue Bonds (Georgetown County Project) Series 2009B (Taxable Build America Bonds), dated December 17, 2009.

"2009 Facilities" shall have the meaning ascribed in the 2009 Installment Purchase and Use Agreement.

"2009 Installment Purchase and Use Agreement" means the Installment Purchase and Use Agreement dated December 1, 2009, as amended by the First Amendment to Installment Purchase and Use Agreement dated December 17, 2009, each between the County and the Corporation, and as may be further amended and supplemented from time to time.

"2009 Real Property" means the respective parcels of real property upon which certain improvements (including the Conveyed Improvements), fixtures and personal property are located and comprising a portion of the 2009 Facilities, situated in the County.

"2009 Trust Agreement" means the Trust Agreement dated December 1, 2009, as supplemented by the First Supplemental Trust Agreement dated December 17, 2009, each between the Corporation and the Trustee, pursuant to which the 2009 Bonds were issued.

"Bond Counsel" means McNair Law Firm, P.A.

"Bonds" means the SCAGO Public Facilities Corporation for Georgetown County Installment Purchase Refunding Revenue Bonds (Georgetown County Project), in one or more series, authorized to be issued pursuant to the 2009 Trust Agreement, as amended or supplemented as contemplated herein.

"Code" means the Internal Revenue Code of 1986, as amended from time to time, or any successor internal revenue laws of the United States enacted by the Congress of the United States in replacement thereof. References to the Code and sections of the Code include relevant applicable regulations, temporary regulations and proposed regulations thereunder and any successor provisions to those sections, regulations, temporary regulations or proposed regulations.

"Conveyed Improvements" shall have the meaning set forth in the 2009 Installment Purchase and Use Agreement.

"Corporation" means SCAGO Public Facilities Corporation for Georgetown County, a South Carolina non-profit corporation, and its successors and assigns.

"County" means Georgetown County, South Carolina.
"County Council" means the Georgetown County Council.

"Financial Advisor" means Compass Municipal Advisors, LLC.

"Forward Delivery Agreement" has the meaning specified in Section 2(f) hereof.

"Ordinance" means this Ordinance of the County Council.

"Purchaser/Underwriter" means the banks, financial institutions or other professionals selected by the Corporation based upon the advice and recommendation of the Financial Advisor to underwrite or purchase the Bonds.

"Trustee" means Wells Fargo Bank, its successors and assigns, or such other qualified financial institution as the Superintendent shall name based upon the advice of the County's Bond Counsel and Financial Advisor.

Section 2. Findings and Determinations. The County Council hereby finds and determines:

(a) Pursuant to Section 4-9-10, Code of Laws of South Carolina, 1976, as amended (the "S.C. Code"), the Council form of government was selected and the Council constitutes the governing body of the County.

(b) Section 4-9-30(2) of the S. C. Code empowers the County to acquire, lease, sell, or otherwise dispose of real and personal property.

(c) In December 2009, the County entered into the 2009 Base Lease and Conveyance Agreement and the 2009 Installment Purchase and Use Agreement under which:

(i) the County leased the 2009 Real Property and conveyed the Conveyed Improvements to the Corporation for the Base Lease Term (as defined in the 2009 Base Lease and Conveyance Agreement);

(ii) the Corporation issued and sold on December 1, 2009, the 2009A Bonds and issued and sold on December 17, 2009, the 2009B Bonds;

(iii) the Corporation used the proceeds from the sale of the 2009A Bonds for the purposes of refunding the $26,000,000 original principal amount SCAGO Public Facilities Corporation for

Georgetown County, Installment Purchase Revenue Bond (Georgetown County Project), Series 2008, and for such other purposes as are provided in the 2009 Installment Purchase and Use Agreement and the 2009 Trust Agreement; the corporation used the proceeds from the sale of the 2009B Bonds for the purposes of defraying the cost of acquiring, constructing, renovating, installing and equipping new and existing public facilities and for such other purposes as are provided in the 2009 installment Use and Purchase Agreement and the 2009 Trust Agreement.

(iv) the Corporation agreed to sell the 2009 Facilities to the County and, upon each payment by the County of Base Payments (as defined in the 2009 Installment Purchase and Use Agreement), title to an undivided interest in the 2009 Facilities equal to the percentage of the Purchase Price (as defined in the 2009 Installment Purchase and Use Agreement) represented by such payment would transfer from the Corporation to the County without further action by either party; and

(v) subject to an Event of Nonappropriation (as defined in the 2009 Installment Purchase and Use Agreement), the County would pay to the Trustee as assignee of the Corporation, Base Payments and Additional Payments (as defined in the 2009 Installment Purchase and Use Agreement) in such amounts and at such times as specified in the 2009 Installment Purchase and Use Agreement.

(d) Pursuant to the 2009 Trust Agreement and the 2009 Assignment Agreement, the Corporation's right to receive the Base Payments and certain other payments as provided in the 2009 Trust Agreement and the 2009 Installment Purchase and Use Agreement (with certain exceptions as provided therein), and rights in and to the 2009 Facilities (including the 2009 Real Property), the 2009 Installment Purchase and Use Agreement, the 2009 Base Lease and Conveyance Agreement and the property rights evidenced thereby in the 2009 Real Property, were assigned to the Trustee.

(e) To date, the County has made Base Payments under the 2009 Installment Purchase and Use Agreement which represents the transfer from the Corporation to the County of approximately 35.45% of the interest in the 2009 Facilities. The portion of the 2009 Facilities which have not yet been transferred to the County continue to be necessary in order for the County to properly provide adequate and appropriate public facilities to citizens and residents of the County. Administrative officials of the County, in consultation with the County's Financial Advisor and Bond Counsel, have thoroughly reviewed the plan of finance involving the potential refunding of all or a portion of the outstanding 2009 Bonds. In order to effect such refunding, the County has determined to authorize the preparation of the respective agreements described in this Ordinance and to enter into certain of such agreements.

(f) Based on current market conditions and projected savings, County Council finds that it may be in the best interest of the County to request the Corporation to refund all or a portion of the outstanding 2009 Bonds (the "Refunded Bonds") because a savings may be effected through such refunding. However, County Council has been advised by the Financial Advisor and the County's Bond Counsel that federal tax law prohibits the Refunded Bonds from being refunded prior to maturity with tax-exempt obligations until at least September 2019 and that, because current market conditions may change, it may be advantageous for the Corporation and the County to execute a forward sale and delivery agreement, rate lock agreement or term loan agreement with the Purchaser/Underwriter (a "Forward Delivery Agreement") in order to lock in an interest rate on the Bonds between the date of this Ordinance and September 2019, in anticipation of the actual sale and delivery of the Bonds occurring in September 2019 or afterwards, all as determined by the Authorized Officers upon advice of Bond Counsel and the Financial Advisor. County Council also recognizes that certain authority relating to such refunding is delegated to the Authorized Officers (as defined herein) through this Ordinance, including but not limited to the authority to determine the amount of the Refunded Bonds.

(g) It is now in the best interest of the County for the County Council to approve the issuance and sale by the Corporation of the Bonds in the principal amount of not exceeding $30,000,000, in one or more series issued as taxable or tax-exempt obligations. The proceeds of the Bonds shall be used by the Corporation for one or more purposes, including (i) refunding the Refunded Bonds; (ii) funding a subaccount of the Reserve Account of the Bond Fund established for the Bonds, if any, in an amount equal to the Reserve Requirement, if any, established therefor; and (iii) paying all or a portion of certain costs and expenses relating to the issuance of the Bonds, including the premiums for insurance or surety bonds applicable to the Bonds, if any, or costs associated with the Forward Delivery Agreement.

(h) Pursuant to an Ordinance adopted by the County Council on June 5, 2012, the County has adopted Written Procedures related to Tax-Exempt Debt.

Section 3. Approval of Issuance of Bonds and Plan of Finance. The County hereby ratifies, confirms and approves the Corporation, including its creation, existence, governance, purposes and activities, and the issuance and sale by the Corporation of its Bonds for the purposes of refunding the Refunded Bonds and other purposes described in Section 2(g) above, in substantial conformance to the documents described herein; provided, that the County Council acknowledges that it may be required to take additional action prior to the issuance of the Bonds, including but not limited to the adoption by County Council of a resolution confirming the findings and representations contained herein not more than one year prior to such issuance, upon the recommendation and advice of Bond Counsel.

For the purposes of the financing contemplated hereby, County Council does hereby approve the preparation and negotiation of one or more amendments or supplements (collectively, the "Amendments") to the 2009 Base Lease and Conveyance Agreement, 2009 Installment Purchase and Use Agreement, 2009 Trust Agreement and 2009 Assignment Agreement (collectively, the "Bond Documents"), in connection with the Corporation's issuance of the Bonds; provided, that in the event the Bonds are issued for the purpose of refunding all of the outstanding 2009 Bonds, the Bond Documents may be amended and restated in their entireties.

The County, for the purposes of the financing contemplated hereby, represents that it currently owns the 2009 Real Property and all of such 2009 Real Property is located within the geographic boundaries of the County.

The Bonds will be authenticated and delivered by the Trustee and the net proceeds from the sale of each series of Bonds to the Registered Owners of each series of Bonds (the "Registered Owners") will be disbursed in accordance with the provisions pursuant to the 2009 Trust Agreement, as amended, for the purposes set forth in Section 2 (g) above.

The County will accept title to the property financed by the 2009 Bonds and refinanced by the Bonds, including any additions to such property, when the 2009 Bonds and the Bonds are discharged.

Section 4. Approval of the Financing Documents and Refunding; Authorization to Execute. County Council hereby approves the execution and delivery by the County of the Amendments to which the County is a party, a letter of representations to the Bond Purchase Agreement, if any, between the Corporation and Purchaser/Underwriter (the "Bond Purchase Agreement"), a refunding trust agreement among the Corporation, the County and Wells Fargo Bank, N.A., as Escrow Agent (collectively, the "County Documents"), and, if determined to be advantageous, the Forward Delivery Agreement. The County Council hereby authorizes and directs the Chair and Vice Chair of County Council, the Clerk to County Council and the Administrator and the Finance Director of the County, or any of them acting alone

(each, an "Authorized Officer"), with the advice of the County's Financial Advisor and Bond Counsel, to determine the amount of the Refunded Bonds and whether satisfactory market conditions and debt service savings exist to proceed with the refunding of the Refunded Bonds and, if applicable, the prior execution of the Forward Delivery Agreement in anticipation thereof, and to approve the forms of and to execute and deliver on behalf of the County the County Documents, and hereby authorizes the Authorized Officers to take such further action and to prepare, disseminate, execute and deliver such additional documents (including bid specifications, subscription documents and directions to purchase escrow securities and redeem the Refunded Bonds) as may be necessary to effect the execution and delivery of the County Documents in accordance with the terms and conditions therein set forth, and the transactions contemplated hereby and thereby. The actions of such Authorized Officers in executing and/or delivering any of such documents is dispositive evidence of the approval thereof by such signatory.

With the advice of the County's Financial Advisor and Bond Counsel, the Bonds shall be sold by the Corporation in a public offering or in a private offering or private placement transaction, and such sale may be conducted to or with the assistance of the Purchaser/Underwriter. In connection therewith, the Authorized Officers are hereby authorized and directed to take such actions in connection with the preparation, publication and/or distribution of information, offering documents (and to "deem final" preliminary versions of such offering documents for purposes of complying with the requirements set forth in Rule 15c2-12 of the Securities and Exchange Commission, promulgated under the Securities Exchange Act of 1934, as amended), private placement memoranda or requests for proposals (as applicable), to solicit interest and receive offers from financial institutions and institutional investors to purchase the Bonds in a private offering, and to accept such offer which is in the best interest of the Corporation and the County.

The Authorized Officers are further authorized and directed, with the advice of the County's Financial Advisor and Bond Counsel, to enter into any investment agreements, repurchase agreements or forward delivery agreements or other contracts and documents (including but not limited to terminations of existing repurchase and forward delivery agreements or liquidation directions) and to take all actions necessary or desirable (including but not limited to the engagement of investment advisors and representatives and the registration of the County with federal or state regulatory authorities) in connection with the investment of funds presently on deposit or to be deposited in the future in various funds and accounts established under the Bond Documents, as amended pursuant to the Amendments, with respect to the 2009 Bonds or the Bonds, or to execute and deliver any documents necessary in connection with the purchase of a bond insurance policy or surety bond, if any, with respect to the Bonds. The authorization conferred herein shall extend to and include, but not be limited to, the documents and certificates reasonably expected to be necessary for the closing of the refunding transaction, including, but not limited to, deeds or other instruments of conveyance, a general certificate of the County, a certificate as to the official statement, a refunding trust agreement, a continuing disclosure undertaking, any designation of County representatives, and such other documents required to be executed in connection with the bond insurance policy or surety bond, if any, with respect to the Bonds.

Section 5. Federal Tax Covenant. The County hereby covenants and agrees with the Holders of the Bonds issued as tax-exempt obligations (the "Tax-Exempt Bonds") that it will not take any action which will, or fail to take any action which failure will, cause interest on the Tax-Exempt Bonds to become includable in the gross income of the bondholders thereof for federal income tax purposes pursuant to the provisions of the Code and regulations promulgated thereunder in effect on the date of original issuance of the Tax-Exempt Bonds and that no use of the proceeds of the Tax-Exempt Bonds shall be made which, if such use had been reasonably expected on the date of issue of the Tax-Exempt Bonds, would have caused the Tax-Exempt Bonds to be "arbitrage bonds," as defined in the Code; and to that end the County hereby shall:

(a) comply with the applicable provisions of Section 103 and Sections 141 through 150 of the Code and any regulations promulgated thereunder so long as the Tax-Exempt Bonds are Outstanding;

(b) establish such funds, make such calculations and pay such amounts, if necessary, in the manner and at the times required in order to comply with the requirements of the Code relating to required rebate of certain amounts to the United States; and

(c) make such reports of such information at the times and places required by the Code.

Section 6. Professionals. The County Council hereby retains McNair Law Firm, P.A., as Bond Counsel and Compass Municipal Advisors, LLC, as Financial Advisor, in connection with the issuance of the Bonds. The Administrator is authorized to execute such contracts, documents or engagement letters as may be necessary and appropriate to effectuate said engagements. The Administrator is further authorized, upon the advice of Bond Counsel or Financial Advisor, to hire additional professionals needed to effectuate the issuance of the Bonds and to execute such contracts, documents or engagement letters as may be necessary and appropriate to effectuate said engagements.

Section 7. Severability. If any section, phrase, sentence, or portion of this Ordinance is for any reason held invalid or unconstitutional by any court of competent jurisdiction, such portion shall be deemed a separate, distinct, and independent provision, and such holding shall not affect the validity of the remaining portions thereof.

Section 8. Repeal of Conflicting Ordinances. All orders, ordinances and parts thereof, procedural or otherwise, in conflict herewith or the proceedings authorizing the execution and delivery of any of the agreements approved by this Ordinance are, to the extent of such conflict, hereby repealed.

Adopted this _____ day of _____, 2017.

GEORGETOWN COUNTY, SOUTH CAROLINA

_____
Chair, County Council

(SEAL)

ATTEST:

_____
Clerk, County Council

First Reading:	April 11, 2017 (Tentative)
Second Reading:	April 25, 2017 (Tentative)
Public Hearing:	May 9, 2017 (Tentative)
Third Reading:	May 9, 2017 (Tentative)

Item Number:	11.a
Meeting Date:	5/9/2017
Item Type:	SECOND READING OF ORDINANCES

AGENDA REQUEST FORM
GEORGETOWN COUNTY COUNCIL

DEPARTMENT: County Council

ISSUE UNDER CONSIDERATION:
Ordinance No. 2017-11 - An Ordinance to Repeal Ordinance No. 96-08 that created the Coastal Carolina University - Georgetown Campus Advisory Committee.

CURRENT STATUS:
The Georgetown County Code of Ordinances provides Georgetown County Council the authority to disestablish any County Council appointed board or commission which has not had a meeting of the majority of it's membership within the previous 12 months.

POINTS TO CONSIDER:
Georgetown County Council has determined the Coastal Carolina University Georgetown Campus Advisory Committee has not met in over a year.

After discussions with Coastal Carolina University, it is apparent other relationships exist between Coastal Carolina University and Georgetown County that promote communication and serve as adequate representation between the two entities within the County.

Considering this, it is in the best interest of Georgetown County to dissolve the Committee and rescind Ordinance 96-08, which created it.

FINANCIAL IMPACT:
n/a

OPTIONS:
1. Adopt Ordinance No. 2017-11.
2. Do not adopt Ordinance No. 2017-11.

STAFF RECOMMENDATIONS:
Staff recommends the adoption of Ordinance No. 2017-11 repealing Ordinance No. 96-08 that created the Georgetown County Coastal Carolina University Advisory Committee.

ATTACHMENTS:

	Description	Type
	Ordinance No. 2017-11 - To repeal Ordinance 96-08 creating the CCU Advisory Committee	Ordinance

STATE OF SOUTH CAROLINA)
) **ORDINANCE NO: #2017-11**
COUNTY OF GEORGETOWN)

AN ORDINANCE TO REPEAL ORDINANCE NO. 96-08 THAT CREATED THE GEORGETOWN COUNTY COASTAL CAROLINA UNIVERSITY ADVISORY COMMITTEE

BE IT ORDAINED BY THE GEORGETOWN COUNTY COUNCIL AS FOLLOWS:

WHEREAS, recently, Georgetown County Council has determined the Coastal Carolina Advisory Committee has not met in over a year; and

WHEREAS, after having discussions with Coastal Carolina University, it is apparent other relationships exist between Coastal Carolina University and Georgetown County that promote communication and serve as adequate representation between the two entities within the County; and

WHEREAS, having not met in over a year and finding adequate representation exists between the two entities, Council has determined it is in the best interest of Georgetown County to dissolve the Committee and rescind Ordinance 96-08 creating the committee; and

NOW, THEREFORE, BE IT ORDERED AND ORDAINED BY THE GEORGETOWN COUNTY COUNCIL:

1. Georgetown County Ordinance No. 96-08, currently codified as Chapter 9, Article II, Sec. 9-21 through 9-27, wherein the Coastal Carolina University Advisory Committee for Georgetown County was established, is hereby **REPEALED AND VOID**, and no longer deemed in effect.
2. Should any word, phrase, clause or provision of this ordinance be declared invalid or unconstitutional by a court of competent jurisdiction, such declaration shall not affect this ordinance as a whole or any part hereof except that specific provision declared by such court to be invalid or unconstitutional.
3. All ordinances or parts of ordinances in conflict with this ordinance or inconsistent with its provisions, are hereby repealed or superseded to the extent necessary to give this ordinance full force and effect.

This ordinance shall take effect upon final reading approval of this ordinance.

DONE, RATIFIED AND ADOPTED THIS _____ DAY OF _____, 2017.

_____ (Seal)
Johnny Morant
Chairman, Georgetown County Council

ATTEST:

_____
Theresa E. Floyd, Clerk to Council

This Ordinance, No. #2017-11, has been reviewed by me and is hereby approved as to form and legality.

_____
Wesley P. Bryant
Georgetown County Attorney

First Reading: April 25, 2017

Second Reading: May 9, 2017

Third Reading: May 23, 2017

Item Number:	11.b
Meeting Date:	5/9/2017
Item Type:	SECOND READING OF ORDINANCES

AGENDA REQUEST FORM
GEORGETOWN COUNTY COUNCIL

DEPARTMENT: County Council

ISSUE UNDER CONSIDERATION:
ORDINANCE No. 2017-12 - AN ORDINANCE TO AMEND SECTION 2-80 "Application" OF ORDINANCE NO. 2008-25, KNOWN AS THE "ORDINANCE TO GOVERN GEORGETOWN COUNTY BOARDS AND COMMISSIONS", TO REMOVE SPECIFIC BOARDS AND COMMISSIONS THAT HAVE BEEN DISSOLVED

CURRENT STATUS:
Ordinance No. 2008-25 was adopted by County Council to provide general provisions for all county boards and commissions appointed by Georgetown County Council.

POINTS TO CONSIDER:
County Council has rescinded the ordinances that created the Georgetown County Economic Development Commission and the Coastal Carolina University-GC Advisory Committee.

Ordinance 2008-25, which governs boards and commissions, lists both committees within the body of that document, and requires an amendment to remove both the Economic Development Commission and the CCU Advisory Committee from the language of that ordinance.

FINANCIAL IMPACT:
n/a

OPTIONS:
1. Adopt Ordinance No. 2017-12.
2. Do not adopt Ordinance No. 2017-12.

STAFF RECOMMENDATIONS:
Staff recommends the adoption of Ordinance No. 2017-12 amending Section 2-80 of Ordinance No. 2008-25 known as the Ordinance to govern County Boards and Commissions.

ATTACHMENTS:

	Description	Type
	Ordinance No 2017-12 Amendment to Board and Commission Ordinance	Ordinance

STATE OF SOUTH CAROLINA)
) ORDINANCE NO: 2017-12
COUNTY OF GEORGETOWN)

AN ORDINANCE TO AMEND SECTION 2-80 "Application" OF ORDINANCE NO. 2008-25, KNOWN AS THE "ORDINANCE TO GOVERN GEORGETOWN COUNTY BOARDS AND COMMISSIONS", TO REMOVE SPECIFIC BOARDS AND COMMISSIONS THAT HAVE BEEN DISSOLVED

WHEREAS, County Council has rescinded the ordinances that created the Georgetown County Economic Development Commission and the Coastal Carolina University-GC Advisory Committee; and

WHEREAS, Ordinance 2008-25, which governs boards and commissions, lists both committees within the body of that document; and

WHEREAS, Ordinance 2008-25 requires an amendment to remove both the Economic Development Commission and the CCU Advisory Committee from the language of that ordinance.

NOW, THEREFORE, be it ordained by the Georgetown County Council that Section 2-80 of Ordinance 2008-25, currently codified in the Georgetown County Code of Ordinances as Chapter 2, Article IV, Division 1, Section 2-80, shall be amended in its entirety to read:

Sec. 2-80. Application.

This article shall apply to the following county-wide advisory boards and commissions: Advisory Committee for Accommodations Tax, Airport Commission, Alcohol and Drug Abuse Commission, Assessment Appeals Board, Building Code Board of Appeals, Disabilities and Special Needs Board, Forestry Board, Foster Care Review Board, Historical Commission, Library Board, Parks and Recreation Commission, Planning Commission, Sheriff's Department Advisory Board, Waccamaw Center for Mental Health Board, and Zoning Board of Appeals.

This Ordinance shall supersede the terms of any other Ordinance that may result in a conflict between the authorizations and prohibitions of such Ordinances.

If any portion of this Ordinance shall be deemed unlawful, unconstitutional, or otherwise invalid, the validity and binding effect of the remaining portions shall not be affected thereby.

DONE IN MEETING DULY ASSEMBLED THIS ___ DAY OF MAY, 2017.

GEORGETOWN COUNTY, SOUTH CAROLINA

By: _____
Johnny Morant, Chairman

ATTEST:

_____
Theresa E. Floyd, Clerk to Council

This Ordinance No. 2017-12, having been reviewed by me and is hereby approved as to form and legality.

_____

Wesley P. Bryant, County Attorney

First Reading: April 25, 2017
Second Reading: May 9, 2017
Third Reading: May 23, 2017

Item Number:	11.c
Meeting Date:	5/9/2017
Item Type:	SECOND READING OF ORDINANCES

AGENDA REQUEST FORM
GEORGETOWN COUNTY COUNCIL

DEPARTMENT: County Council

ISSUE UNDER CONSIDERATION:
Ordinance No. 2017-13 - An Ordinance to declare as surplus a tract of property known as TMS #01-0445-041-00-00 and to authorize the County Administrator to sell the property in the manner as prescribed within Ordinance No. 2008-09, Georgetown County Purchasing Ordinance, as amended.

CURRENT STATUS:
Pending adoption.

POINTS TO CONSIDER:
Georgetown County owns certain real estate adjacent to Aviation Boulevard in the Airport Industrial Park, Georgetown County, South Carolina, designated as TMS No. 01-445-041-00-00.

Georgetown County has determined it is in the best interest of the County that the subject property is declared surplus and sold to the benefit of Georgetown County.

OPTIONS:
1. Adoption of Ordinance No. 2017-13 to declare as surplus a tract of property known as TMS #01-0445-041-00-00 and to authorize the County Administrator to sell the property.
2. Do not adopt Ordinance No. 2017-13.

STAFF RECOMMENDATIONS:
Recommendation for the adoption of Ordinance No. 2017-13 to declare as surplus a tract of property known as TMS #01-0445-041-00-00 and to authorize the County Administrator to sell the property.

NOTE: Ordinance No. 2017-13 was introduced at first reading by title only. A *motion to amend* will be required at 2nd reading to incorporate proposed text.

ATTACHMENTS:

Description	Type
Ordinance No. 2017-13 Declaration of Surplus Property and Authorization to Sell	Ordinance

STATE OF SOUTH CAROLINA)
) ORDINANCE NO: #2017-13
COUNTY OF GEORGETOWN)

AN ORDINANCE TO DECLARE AS SURPLUS A TRACT OF PROPERTY KNOWN AS TMS #01-0445-041-00-00 AND TO AUTHORIZE THE COUNTY ADMINISTRATOR TO SELL THE PROPERTY IN THE MANNER AS PRESCRIBED WITHIN ORDINANCE NO. 2008-09, GEORGETOWN COUNTY PURCHASING ORDINANCE, AS AMENDED.

BE IT ORDAINED BY THE GEORGETOWN COUNTY COUNCIL AS FOLLOWS:

WHEREAS, Georgetown County owns certain real estate adjacent to Aviation Boulevard in the Airport Industrial Park, Georgetown County, South Carolina, containing approximately 3.3 acres and designated as TMS No.: 01-445-041-00-00; and

WHEREAS, Georgetown County Council has determined a portion of the subject property, is unsuitable for any future needs of the County thus it can be declared surplus and sold to the benefit of Georgetown County; and

WHEREAS, the fair market value of the property has been determined; and

WHEREAS, Georgetown County Council, after consideration, finds that it is desirable to declare the property as surplus, authorizing the sale of the property, and transfer the interests by applicable deed; and

WHEREAS, a public hearing discussing the matter was held on _____.

NOW, THEREFORE, BE IT ORDERED AND ORDAINED BY THE GEORGETOWN COUNTY COUNCIL, THAT:

1. THE COUNTY COUNCIL DECLARES THE IDENTIFIED PROPERTY, TMS# 01-0445-041-00-00 (EXHIBIT A) AS SURPLUS PROPERTY AND TO FURTHER AUTHORIZE THE COUNTY ADMINISTRATOR TO DIRECTLY SELL THE SAME BY FIRST OFFERING THE PROPERTY TO THE NEIGHBORING OWNER AT FAIR MARKET VALUE IN ACCORDNANCE WITH ORDINANCE 2008-09, AS AMENDED.

Should any word, phrase, clause or provision of this ordinance be declared invalid or unconstitutional by a court of competent jurisdiction, such declaration shall not affect this ordinance as a whole or any part hereof except that specific provision declared by such court to be invalid or unconstitutional.

All ordinances or parts of ordinances in conflict with this ordinance or inconsistent with its provisions, are hereby repealed or superseded to the extent necessary to give this ordinance full force and effect.

This ordinance shall take effect upon final approval of this ordinance.

DONE, RATIFIED AND ADOPTED THIS _____ DAY OF _____, 2017.

_____ (Seal)
Johnny Morant
Chairman, Georgetown County Council

ATTEST:

_____
Theresa E. Floyd, Clerk to Council

This Ordinance, No. #2017-13, has been reviewed by me and is hereby approved as to form and legality.

_____

Wesley P. Bryant
Georgetown County Attorney

First Reading:

Second Reading:

Third Reading:

Item Number:	12.a
Meeting Date:	5/9/2017
Item Type:	FIRST READING OF ORDINANCES

AGENDA REQUEST FORM
GEORGETOWN COUNTY COUNCIL

DEPARTMENT: Finance

ISSUE UNDER CONSIDERATION:
Ordinance No. 2017-14 to amend the FY 2016/17 Operating Budget of Georgetown County.

CURRENT STATUS:
Ordinance No. 2017-14 is presented for First Reading by title only.

POINTS TO CONSIDER:
This amendment revises the FY 2016/17 budget by appropriating additional funds from available fund balance and from unanticipated current year revenues. Those expenditures for which supplemental appropriations are required, and which Council has previously reviewed and approved, will be noted as applicable.

FINANCIAL IMPACT:
As disclosed in the ordinance.

OPTIONS:
1. Approval of Ordinance 2017-14 by Title Only
2. Reject Ordinance 2017-14 by Title Only

STAFF RECOMMENDATIONS:
Approve first reading of Ordinance 2017-14 by title only.

ATTORNEY REVIEW:
Yes

Item Number:	12.b
Meeting Date:	5/9/2017
Item Type:	FIRST READING OF ORDINANCES

AGENDA REQUEST FORM
GEORGETOWN COUNTY COUNCIL

DEPARTMENT: Planning / Zoning

ISSUE UNDER CONSIDERATION:
Ordinance No. 2017-15 - An amendment to Article 2, Section 3-10 and Article 4, Section 3-2B of the Georgetown County Land Development Regulation dealing with streets and easements for Minor Subdivisions.

POINTS TO CONSIDER:

1. The County Development Regulations and Zoning Ordinance require that a new lot front on a dedicated street right-of-way (ROW). Many other local governments allow a limited number of lots to obtain their access from an easement.
2. A dedicated street ROW is not part of any lot and is owned by the State, the County or a private entity.
3. An access easement is actually an area of a lot(s) that an owner allows others to utilize permanently for access to their property.
4. In the past, the County has received requests for access easement approval, usually associated with someone wanting to subdivide a rear portion of their large parcel into a second parcel. These requests are denied.
5. One important distinction is that setbacks are measured from the ROW for a dedicated road but would be measured from a property line not an easement boundary using an access easement.
6. Physically, access easements will likely look like a driveway although staff proposes the easement to be named and a street sign to be installed.
7. The area of an easement would remain with the lot(s) and be included in the minimum lot area.
8. Staff proposes limiting the number of parcels allowed to front on an access easement to three (3). The attached ordinance requires a minimum easement width of 25 feet.
9. Per fire regulations, each access easement would still be required to have an adequate turn-around for emergent vehicles if the easement exceeds 150' in length.
10. Staff recommended adoption of an ordinance regarding frontage for lots that front on easements as well as an amendment to the Land Development Regulations allowing up to three lots to front on a shared private driveway/easement.
11. The Planning Commission held a public hearing on this issue at their April meeting. One person spoke in favor of the proposed ordinance change. The Commission voted 5 to 0 to recommend approval for the proposed ordinance changes with the following conditions: a. removal of the words "The traveled portion of" in the second bolded paragraph of the land development regs ordinance and b. the addition of the following sentence to the land development regs ordinance "The applicable Fire Department maintains the right to require clearance of low handing branches for vehicular access."

FINANCIAL IMPACT:
Not applicable

OPTIONS:

1. Approve as recommended by PC
2. Deny request
3. Approve an amended text change
4. Defer action
5. Remand to PC for further study

STAFF RECOMMENDATIONS:
Approve as recommended by PC

ATTORNEY REVIEW:
Yes

ATTACHMENTS:

	Description	Type
🗋	Ordinance No. 2017-15 Amendment to Article 2 Sect 3-10 of Development Regs re streets and easements for minor subdivisions	Ordinance

STATE OF SOUTH CAROLINA)
) ORDINANCE NO. 2017-15
COUNTY OF GEORGETOWN)

AN ORDINANCE TO AMEND ARTICLE 2, SECTION 3-10 AND ARTICLE 4, SECTION 3-2B OF THE DEVELOPMENT REGULATIONS OF GEORGETOWN COUNTY, DEALING WITH STREETS AND EASEMENTS FOR MINOR SUBDIVISIONS.

BE IT ORDAINED BY THE COUNTY COUNCIL MEMBERS OF GEORGETOWN COUNTY, SOUTH CAROLINA, IN COUNTY COUNCIL ASSEMBLED THAT ARTICLE 2, SECTION 3-10 OF THE DEVELOPMENT REGULATIONS BE AMENDED TO READ AS FOLLOWS:

3-10. Street within Minor Developments

All public and private streets in minor developments shall conform to the standards found in Article 4 of this Ordinance. Private streets in minor development, ~~containing ten or fewer lots,~~ **four to ten lots**, which are to remain private, are not required to be paved. However, such streets shall be improved in accordance with standards enumerated in this Ordinance and shall be inspected by the Planning Staff.

The private right-of-way shall be improved with an all-weather driving surface capable of supporting emergency vehicles.

Said right-or-way shall be shown on the plat presented for recording and shall be certified by a registered land surveyor. The notation below shall be shown on the plat presented for recording.

> "This private right-of-way shall be owned and maintained by the [property owner(s), HOA, POA or other designated entity]. Georgetown County shall not be responsible for the maintenance of or the improvements to the private right-of-way."

Roadway inspection is not required for streets in minor developments of three or fewer lots unless the roadway is intended to be dedicated to the county. Instead, the developer may utilize a shared private driveway/easement to access said parcels. Lots having frontage on an existing County or State roadway that can obtain an encroachment permit from Georgetown County or SCDOT shall not be counted as part of the maximum 3 lots that access the shared private driveway/easement. If an encroachment permit cannot be obtained, such lot shall be counted toward the maximum 3 lots permitted to access the shared private driveway/easement.

The shared private driveway/easement shall be no less than 25 feet in width to ensure that adequate fire access is maintained. The traveled way shall be improved with an all-weather driving surface capable of supporting emergency vehicles. The applicable Fire Department maintains the ability to require clearance of low-

hanging branches for vehicular access. Utility location within the traveled portion of the easement shall be at the discretion of the applicable utility provider.

Except as provided for in Article 4, a shared private driveway/access easement shall serve a maximum of three lots. Subdivision of the parcel fronting along the shared private driveway/access easement beyond three lots shall require that the driveway be upgraded to the standards of a public or private street right-of-way. Shared private driveways/access easements are not eligible for dedication to the County unless improved to the standards of Article 4 of these regulations. All shared driveways/access easements must be named for 911 purposes per the requirements of Article 2, Section 5.

Only one shared private driveway/easement per roadway frontage may be installed to provide access to proposed lots. A shared private driveway/access easement shall not originate from another shared private driveway/access easement. A shared private driveway/easement may receive access from a fifty (50) foot private right-of-way. If a parcel has multiple road frontages, one shared private driveway/access easement may be installed from each roadway. Each shared private driveway/access easement can serve a maximum of three lots.

Shared private driveways/access easements originating from different roadways may be connected to form a continuous road. If such a connection is proposed, the entire roadway shall be improved to the roadway improvement standards of Article 4 of these regulations. The costs of improving the roadway shall be that of the developer proposing the connection.

BE IT ORDAINED BY THE COUNTY COUNCIL MEMBERS OF GEORGETOWN COUNTY, SOUTH CAROLINA, IN COUNTY COUNCIL ASSEMBLED THAT ARTICLE 4, SECTION 3-2B OF THE DEVELOPMENT REGULATIONS BE AMENDED TO READ AS FOLLOWS:

<u>3-2. Lots</u>

B. Each lot must front for a minimum of fifty (50) feet upon a street or **shared driveway/access easement as allowed in Article 2, Section 3-10**, except on cul-de-sacs radii in which case thirty (30) feet of frontage is required.

DONE, RATIFIED AND ADOPTED THIS _____ DAY OF _____, 2017

_____ (SEAL)
Johnny Morant
Chairman, Georgetown County Council

ATTEST:

_____
Theresa Floyd
Clerk to Council

This Ordinance, No. 2017-15, has been reviewed by me and is hereby approved as to form and legality.

_____
Wesley P. Bryant
Georgetown County Attorney

First Reading: _____

Second Reading: _____

Third Reading: _____

Item Number:	12.c
Meeting Date:	5/9/2017
Item Type:	FIRST READING OF ORDINANCES

AGENDA REQUEST FORM
GEORGETOWN COUNTY COUNCIL

DEPARTMENT: Planning / Zoning

ISSUE UNDER CONSIDERATION:
Ordinance No. 2017-16 - An amendment to Article 4, Section 410 of the Georgetown County Zoning Ordinance as it relates to street frontage.

POINTS TO CONSIDER:

1. The County Development Regulations and Zoning Ordinance require that a new lot front on a dedicated street right-of-way (ROW). Many other local governments allow a limited number of lots to obtain their access from an easement.
2. A dedicated street ROW is not part of any lot and is owned by the State, the County or a private entity.
3. An access easement is actually an area of a lot(s) that an owner allows others to utilize permanently for access to their property.
4. In the past, the County has received requests for access easement approval, usually associated with someone wanting to subdivide a rear portion of their large parcel into a second parcel. These requests are denied.
5. One important distinction is that setbacks are measured from the ROW for a dedicated road but would be measured from a property line not an easement boundary using an access easement.
6. Physically, access easements will likely look like a driveway although staff proposes the easement to be named and a street sign to be installed.
7. The area of an easement would remain with the lot(s) and be included in the minimum lot area.
8. Staff proposes limiting the number of parcels allowed to front on an access easement to three (3). The attached ordinance requires a minimum easement width of 25 feet.
9. Per fire regulations, each access easement would still be required to have an adequate turn-around for emergent vehicles if the easement exceeds 150' in length.
10. Staff recommended adoption of an ordinance regarding frontage for lots that front on easements as well as an amendment to the Land Development Regulations allowing up to three lots to front on a shared private driveway/easement.
11. The Planning Commission held a public hearing on this issue at their April meeting. One person spoke in favor of the proposed ordinance change. The Commission voted 5 to 0 to recommend approval for the proposed ordinance changes with the following conditions: a. removal of the words "The traveled portion of" in the second bolded paragraph of the land development regs ordinance and b. the addition of the following sentence to the land development regs ordinance "The applicable Fire Department maintains the right to require clearance of low handing branches for vehicular access."

FINANCIAL IMPACT:
Not applicable

OPTIONS:
1. Approve as recommended by PC

2. Deny request

3. Approve an amended request
4. Remand to PC for further study
5. Defer action

STAFF RECOMMENDATIONS:
Approve as recommended by PC

ATTORNEY REVIEW:
Yes

ATTACHMENTS:

	Description	Type
🗋	Ordinance no. 2017-16 Amendment to Article 4 Section 410 of ZO regarding street frontage	Ordinance

STATE OF SOUTH CAROLINA)
) ORDINANCE NO: 2017-16
COUNTY OF GEORGETOWN)

AN AMENDMENT TO ARTICLE IV, GENERAL PROVISIONS, SECTION 410, STREET FRONTAGE

BE IT ORDAINED BY THE COUNTY COUNCIL MEMBERS OF GEORGETOWN COUNTY, IN COUNTY COUNCIL ASSEMBLED:

To Amend Article IV, General Provisions, Section 410, Street Frontage, as follows:

410. Street Frontage. Except as herein provided, no building shall hereafter be erected, constructed, moved or relocated on a lot which does not have at least fifty (50) feet of frontage on a publicly dedicated and accepted or publicly maintained street, except:

410.1 Lots fronting on cul-de-sacs may have a minimum road frontage of thirty (30) feet if the lot is at least fifty (50) feet in width at the building line;

410.2 Condominiums and townhouses may be excluded from this provision with the approval of the Planning Commission;

410.3 Lots located on a private street in minor subdivisions or planned developments, which are shown on a property approved and recorded plat upon which said private street is so designated;

410.4 Where a lot exists prior to the adoption of the Zoning Ordinance without any frontage, the Planning Commission may determine if private access is adequate for the development of the lot; however, if the owner of the lot owns an adjoining lot with street access, he must combine said lots to comply with this section. This exception only applies to lots separately owned since the enactment of the Ordinance (January 1, 1974); and

410.5 Lots created in a Minor Subdivisions of three or fewer lots and fronting on a shared driveway, which shall be a recorded access easement, as provided for in Article 2, Section 3-10.

DONE, RATIFIED AND ADOPTED THIS _____DAY OF _____, 2017.

_____ (Seal)
Johnny Morant
Chairman, Georgetown County Council

ATTEST:

_____
Theresa Floyd
Clerk to Council

This Ordinance, No. 2017-16, has been reviewed by me and is hereby approved as to form and legality.

_____
Wesley Bryant
Georgetown County Attorney

First Reading:_____

Second Reading:_____

Third Reading:_____

Item Number:	12.d
Meeting Date:	5/9/2017
Item Type:	FIRST READING OF ORDINANCES

AGENDA REQUEST FORM
GEORGETOWN COUNTY COUNCIL

DEPARTMENT: Public Services

ISSUE UNDER CONSIDERATION:
ORDINANCE NO. 2017-17 - AN ORDINANCE TO AMEND ORDINANCE No. 2016-24 TO AUTHORIZE THE LEASE OF HANGARS AND OTHER STORAGE FACILITIES AT THE GEORGETOWN COUNTY (GGE) AND ANDREWS (PHH) AIRPORTS.

CURRENT STATUS:
First Reading by Title Only

Item Number:	15.a
Meeting Date:	5/9/2017
Item Type:	REPORTS TO COUNCIL

AGENDA REQUEST FORM
GEORGETOWN COUNTY COUNCIL

DEPARTMENT: Public Information

ISSUE UNDER CONSIDERATION:
Presentation of David Scoggins as Employee of the Quarter for the first quarter of 2017.

CURRENT STATUS:
David Scoggins, a firefighter/EMT with the Georgetown County Fire/EMS, has been named Georgetown County's Employee of the Quarter. He has been employed with the county for five years.

POINTS TO CONSIDER:
The Employee of the Quarter Award was designed to recognize full- and part-time employees at non-managerial levels in all county departments.

David Scoggins has been a firefighter and EMT with Georgetown County Fire and Rescue for the last five years, and has provided exemplary service. He has dedicated his life to caring for others and does so selflessly, his supervisors said in a letter nominating him for this recognition.

On calls, David always maintains his composure and provides care and understanding to the residents of our county and to his peers. He is a mentor and a role model for all new and current employees, and he continues to impress his supervisors "each and every day," they wrote.

David is usually assigned to Medic 10, one of the busiest ambulances in his department, yet he never complains and always gets the job done. He is a “go to” resource within the department and can always be counted on.

In addition to his normal responsibilities, David serves as a member of the Emergency Services OIP committee and has worked on projects to improve the level of fire protection within our district.

The responsibility falls on David when it comes to assuring the state of readiness of his department's ambulances. Each and every month, he carefully inspects every ambulance in the fleet to ensure that all equipment, supplies and medications are present and in good condition. He has managed the department's medical supply inventory for the last six months. He makes every effort to ensure that our EMTs and Paramedics have everything that they need on hand to perform their duties.

"All of these qualities embody what we seek out in our employees to represent county government to our citizens." said Jim Thomas, the department's interim division chief of training. “I am honored to have David as a friend and coworker and feel that he is very deserving of this recognition."

FINANCIAL IMPACT:
N/A

OPTIONS:
Report is provided or information only and requires no action of Council.

STAFF RECOMMENDATIONS:
Report is provided or information only and requires no action of Council.

ATTORNEY REVIEW:
No

ATTACHMENTS:

	Description	Type
	Nomination form	Cover Memo

EMPLOYEE OF THE QUARTER NOMINATION FORM

Employee's name: _____David Scoggins_____

Job title: _____Firefighter/EMT_____

Department/Division: _____Emergency Services / County Fire/EMS_____

Number of years employed with County: _____5_____

List all positions held within County:
_____Firefighter/EMT_____
_____
_____
_____

What does this employee's current job description entail?
As a Firefighter/EMT, performs fire suppression activities on the fireground and providing medical to the sick and injured. Time on duty is split between assignments on the fire apparatus and the ambulance.

On an attached sheet and using specific examples, please explain why this employee should be named Employee of the Quarter. This narrative should be no more than one page in length and may include but is not limited to:

- Goals/objectives the employee has completed, especially in the last quarter;
- Committees served on and/or volunteer service to the county;
- Ways the employee has demonstrated initiative and enthusiasm at work;
- Certifications, licenses, etc.;
- Details about the quality of the employees work, knowledge of the job and department;
- Details about how the employee interacts with others, including customers and co-workers.

_____ __March 23, 2017___

Director's Signature Date

We would like to start by saying that David Scoggins is an exceptional man. He has dedicated his life to caring for others and does so selflessly. David has many years of experience as a Firefighter and an EMT and is truly an asset to County Fire/EMS in so many ways. His performance on calls is exemplary; he always maintains his composure and ensures care and understanding to the citizens of our county and to his peers. David is a mentor and a role model for all new and current employees and he continues to impress us each and every day. He is usually assigned to Medic 10, one of the busiest ambulances in our department, yet he never complains and always seems to get things done. He is a "go to" resource within the department and can always be counted on. David serves as a member of the Emergency Services OIP committee and has worked on projects to improve the level of fire protection within our district.

The responsibility falls on David when it comes to assuring the state of readiness of our ambulances. Each and every month, he goes through each of our ambulances with a fine toothed comb to ensure that all equipment, supplies and medications are present and in good condition. David has managed our medical supply inventory for the past 6 months. He makes every effort to ensure that our EMT's and Paramedics have everything that they need on hand to perform their duties. All of these qualities embody what we seek out in our employees to represent county government to our citizens. "I am honored to have David as a friend and coworker and feel that he is very deserving of this recognition", said Jim Thomas, Interim Division Chief of Training.

Item Number:	15.b
Meeting Date:	5/9/2017
Item Type:	REPORTS TO COUNCIL

AGENDA REQUEST FORM
GEORGETOWN COUNTY COUNCIL

DEPARTMENT: Planning / Zoning

ISSUE UNDER CONSIDERATION:
Georgetown County adoption of multi-jurisdictional program for public information (PPI)

CURRENT STATUS:
Currently, no multi-jurisdictional plan regarding implementation of the flood management program exists.

POINTS TO CONSIDER:
1. Georgetown County, the City of Georgetown and the Town of Pawleys Island all participate in the Community Rating System (CRS) which is part of the National Flood Insurance Program (NFIP). This program is sponsored by FEMA and provides a way for individuals who have flood insurance to achieve lower premiums.

2. Communities are rated on a scale of 1 through 10 with 1 being the best rating. Currently Georgetown County has a rating of 7, the City of Georgetown a rating of 7 and the Town of Pawleys Island has a 6. Georgetown County residents currently receive a 15% discount from their flood insurance premiums because of this rating. A reduction from one level to another results in a 5% discount to an individual's flood insurance premium.

3. Adoption and implementation of a PPI is a step that will facilitate Georgetown County, the City of Georgetown and the Town of Pawleys Island receiving an improved rating.

4. This informative plan includes community needs assessments and means to educate the public regarding flood insurance.

FINANCIAL IMPACT:
Minimal

OPTIONS:
1. Adopt PPI as attached
2. Amend the attached PPI
3. Do not adopt a PPI

STAFF RECOMMENDATIONS:
Adopt the attached PPI

ATTORNEY REVIEW:
Yes

ATTACHMENTS:

Description	Type
PPI 2017	Backup Material

GEORGETOWN, SOUTH CAROLINA

MULTI-JURISDICTIONAL
PROGRAM FOR PUBLIC INFORMATION (PPI)

March 30, 2017

Table of Contents

		Page
I.	History and Background	3
II.	PPI Committee	4
III.	Goals	5
IV.	Community Needs Assessment	6
	-Georgetown County	
	Flood Hazards, Insurance Data, & Insurance Assessment	6
	-City of Georgetown	
	Flood Hazards, Insurance Data, & Insurance Assessment	8
	-Pawleys Island	
	Flood Hazards, Insurance Data, & Insurance Assessment	9
V.	Repetitive Loss Properties	11
VI.	Social and Economic Needs	11
VII.	Target Audiences	12
VIII.	Existing Public Information Efforts	13
IX.	Flood Insurance Rate Maps	14
X.	Projects and Initiatives	15
XI.	Flood Response Preparations	16
XII.	Annual Evaluation	16
XIII.	Plan Adoption	17
XIV.	Acronyms	17
XV.	Contacts	17

Tables

Tables 1-3: Flood Insurance Data and Precentages in Force	7-10
Table 4: Average Converage for Insurance Policies in Force	11
Table 5: Existing Public Information	13-14
Table 6: Comprehensive Outreach Projects	18-20
Table 7: Flood Response Preparation Projects	21

Georgetown's Multi-Jurisdicional
Floodplain & Stormwater
Program for Public Information

History and Background

Few other areas in America contain more history or charm than Georgetown, South Carolina. From its earliest beginnings as the probable site of the first European settlement in North America in 1526, to its present status as a vibrant and gracious county of approximately 60,572, Georgetown has long been known for its warm hospitality and Southern charm. Located on the coast of South Carolina, Georgetown is home to a wealth of history and culture, and some of the state's most beautiful beaches, marshes, and rivers. Whether your thing is lazing on the beach, enjoying an ocean breeze from a porch rocking chair, or something a bit more active, Georgetown County has something to appeal to everyone. Georgetown's long history combined with its diversity of cultures, linkage to the sea, triumphs, defeats, and revitalizations have all contributed to create an area known for its charm and beauty.

Georgetown County and its municipalities (the City of Georgetown & Pawleys Island) have been actively participating in the Community Rating System (CRS) since the early 2000's. The Community Rating System (CRS) is part of the National Flood Insurance Program (NFIP), which is sponsored by FEMA, the Federal Emergency Management Agency. It provides a reduction to flood insurance premiums in the participating communities. These reductions are based on community floodplain management programs, including the public information activities. For a community to retain those discounts on their flood insurance premiums, they must continue to implement the programs and provide status reports to the NFIP each year.

The following are the credit ratings for Georgetown:

Georgetown County	7
City of Georgetown	7
Pawleys Island	6

The program gives property owners a 5% reduction to their flood insurance premium for every point they go down. Georgetown County currently receives a 15% discount, City of Georgetown a 15% discount, and Pawleys Island a 20% discount off their flood insurance premiums. This discount applies for any property owner that has flood insurance within these jurisdictions, and is inside a regulated floodzone. Properties outside the flood zones may still purchase flood insurance, but because of special prorated rates for X Zones, they do not receive this discount.

In an effort to reduce insurance cost to the residents and business owners and to reach more people through a more aggressive outreach program, Georgetown County has now formed a multi-jurisdictional Program for Public Information (PPI). The community has produced outreach materials on the hazards of flooding since the beginning of the CRS program. Special efforts were made for areas having repetitive losses, yet areas needing specific information were not targeted. By developing the PPI committee, these areas will now receive the outreach

information that will benefit them and offer additional information when needed. Areas prone to flooding, new property owners needing information on flood risk, areas having insufficient insurance as well as other target areas can now be given information that pertain directly to them through the PPI.

Georgetown County, the City of Georgetown, & Pawleys Island consider this program vital to the entire community for all the positive benefits it produces. From flood hazard information and mitigation techniques to floodplain protection and benefits, the PPI will help our community achieve ideal success in all areas of public outreach.

PPI Committee

The community set out to get a dozen volunteer members that could provide knowledgeable input as a PPI committee member. These stakeholders represent insurance agents, real estate agents, banking/lending agencies, surveyors, and residents that live in the floodplain. By having the following members on the committee, Georgetown receives valuable insight and advice from their collective expertise.

- **Tony Jordan** - Owner, Allstate Insurance, Georgetown
- **Wendell C Powers, PLS** - Surveyor, Powers Land Surveying
- **Chuck Richardson Sr.** - Senior Associate, Coldwell Banker Chicora Real Estate
- **Tom Britton**, CFM, AICP - Planning Director, Waccamaw Regional COG
- **Daniel Newquist**, AICP - Planner, Waccamaw Regional Council of Governments
- **Cindy Grace** - Coordinator, Emergency Management Division, Gtown County
- **Kenny McConnell** - Retired, Citizen of Georgetown County
- **Mackie Altman** - Realtor, Altman Realty
- **Diane Allen** - Town Clerk, Pawleys Island
- **Walter McElveen** - Broker in Charge, Pawleys Island Realty
- **Leda McIntyre Hall** - Pawleys Island Resident
- **Alex Boyer** - Pawleys Island Resident
- **Greg Badgett** - Lender, The Citizen's Bank
- **Shane Bowen** - Realtor, The Litchfield Company
- **Ryan Fabbri**, CFM - Town Administrator, Town of Pawleys Island
- **Mike Young** - Building Official, Georgetown County
- **Murray Presley** - Plan Reviewer, Georgetown County
- **Matthew Millwood**, CFM - Comm Planner/GIS Technician, City of Georgetown
- **Rick Martin**, CBO, CFM - Building & Zoning Administrator, City of Georgetown

The role of the committee has been to assist in developing the PPI by providing feedback on areas of the community that should be targeted for outreach, the types of messages should be delivered, and by whom and how often. The group members were also asked to share information on any efforts related to this work that have occurred or are occurring within the community as well.

Comment [MJ1]:

The municipal staff developed the agendas and facilitated the meetings. Prior to setting each meeting date, staff surveyed the committee members for their availability to ensure that the group met the attendance requirements outlined in the new CRS manual (Developing A Program for Public Information, Step 1). It was decided that meetings around lunch time worked best for the group, so staff scheduled the meetings at 12 noon and supplied lunch for all committee members.

The initial PPI Committee meeting was held on May 11, 2016 in the City of Georgetown H&CD conference room. After lunch and some roundtable floodplain discussion, the committee followed steps one (1) and two (2) of the seven step plan outlined in the 2013 CRS Manual, pages 330-12 through 330-14. During the meeting, the committee expressed the needs of the community and the different needs for individual areas/targets within the local municipalities as well as the county as a whole. The committee members discussed the need for a combative campaign to get flood information out to the entire public and discussed target areas around Georgetown that needed special attention. Some of these targets included ocean front, river front, and X Zones that were flooded during the historic October 2015 flood event.

The second meeting was held on June 22, 2016 in the Council Chambers at City Hall. The agenda followed steps three through five (3-5) of the seven step plan. During this meeting, committee members reviewed the six messages of the CRS Table 330-1 and matched topics to the six target audiences that they felt were compatible, and started developing the specific messages. This work is detailed under the "Target Audiences" section of this document. The committee informally inventoried related efforts that were already taking place in the community. Each community representative filled in the Committee with the projects that they were already doing. They discussed how those programs and activities fit in the PPI plan as they are being presented now, and how they can be modified to serve the jurisdiction's overall effort in a better way.

Based on information gathered during the second meeting, municipal staff assembled the first rough draft of the Program for Public Information. The draft was then reviewed by the committee members for revisions and amendments based on the discussion from the previous two meetings. Then, a final draft of the PPI was prepared by staff and approved by the entire committee on March 15, 2017. Final draft of PPI was then sent to Janice Mitchell of FEMA Region IV to request any comments or corrections that she may have on the draft document. Finally, the document was then presented to all municipal councils for their final approval and adoption (see adoption dates for each jurisdiction on page 17 of this document).

Goals

All members of the PPI Committee share a common vision for a better informed public in which they are educated about the flood risks, what they can do to decrease future damage, and the multitude of benefits of having flood insurance. The PPI plan is a great tool to help achieve that vision. The following are the overall goals and objectives recommended by the PPI Committee:

1. Utilize the many outreach projects and materials to educate residents and business owners of the importance of floodplain management.
2. Encourage citizens of Georgetown County, the City of Georgetown, & Pawleys Island to purchase flood insurance, even if they are not located in a regulated floodzone (SFHA).
3. Encourage municipal governments to fund floodplain management programs and staff to support the community.
4. Adopt stricter regulations than the FEMA standards in the CRS Coordinators Manuel to help reduce the risk of flooding to both residential and commercial structures.
5. Continue to work together as a multi-jurisdictional body, sharing information and material, to help lower the credit rating and save citizens money on their insurance premiums.
6. Get the Coastal Association of Realtors to mandate training and disclosure on floodzones for all licensed realtors in the county.
7. Use Coastal Association of Realtors relationship to springboard the first floodplain management user group in South Carolina.

Community Needs Assessments

The Georgetown County area along the South Carolina coast is a great place to do business, visit, and live. Located 40 miles south of Myrtle Beach and 60 miles north of Charleston, Georgetown and Pawleys Island are unique coastal communities offering a diverse mixture of opportunities for fun and enjoyment. All three jurisdictions have flooding issues, mainly because of the topography of the land in the so-called "Low Country". Let's take a look at each community's self-assessments.

Georgetown County

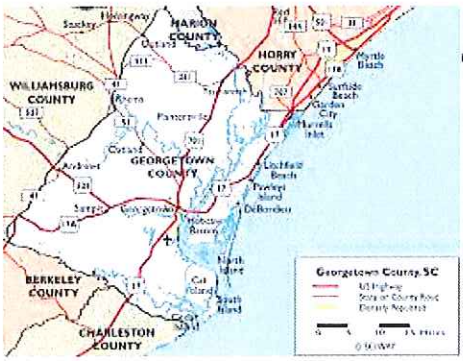

Georgetown County is a little more than 800 square miles of beautiful oak trees, marshes, and rivers. With a population over 60,500, many of the county's residents live or work in or near a floodzone. The great South Carolina flood in October 2015 affected many of the residents of

Georgetown County, especially along the five rivers that meander through this area. The PPI Committee concluded that County needs include: better floodplain mapping, community flood hazard & insurance education, and tougher flood related building regulations.

Flood Hazards

Georgetown County is exposed to many flood related hazards like hurricanes, tropical storms, storm surge, severe thunderstorms, and riverine flooding. Many residences that were located outside the 1% annual floodzones experienced major flooding during the "1,000 year" rainfall event along the Black and Santee Rivers in October 2015. This event displaced thousands of people and called for mandates to look into the current flood maps.

Flood Insurance Data

The best source for flood hazard information for Georgetown County is the insurance data. The County has 7,751 active flood insurance policies in effect as of the date of this document. Flood insurance is required for all jurisdictions as a condition of federal aid on a mortgage or loan that is federally insured for a building located in a SFHA. (See tables 1-1 thru 1-3)

Table 1-1:

Percentage of Buildings Insured - Georgetown County			
Flood Zone	**Policies**	**Properties**	**Percentage**
X	3,484	32,370	10.8%
AE	3,695	11,048	33.4%
VE	572	5,876	9.7%

Table 1-2:

Pre-FIRM Policies in Force			
Flood Zone	**Pre-FIRM**	**Premium**	**Insurance in Force**
X	481	$ 247,288	$ 135,501,100
AE	1,565	$ 2,118,445	$ 309,216,900
VE	259	$ 1,145,855	$ 57,119,500
Total:	2,305	$ 3,511,588	$ 501,837,500

Table 1-3:

Post-FIRM Policies in Force			
Flood Zone	**Post-FIRM**	**Premium**	**Insurance in Force**
X	3,003	$ 1,286,622	$ 947,833,800
AE	2,130	$ 1,045,792	$ 581,113,000
VE	313	$ 1,633,626	$ 96,399,700
Total:	5,446	$ 3,966,040	$ 1,625,346,500

City of Georgetown

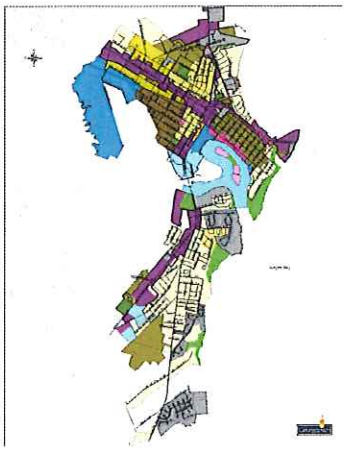

Founded in 1734, the City of Georgetown boasts 7.2 square miles of rich history. Located mainly on the Winyah Bay and Sampit River, the City of Georgetown has many issues with flooding and flood hazards. These hazards include hurricane surge, riverine flooding, tidal flooding, and drainage systems that are overwhelmed during even moderate rainfall events. Roughly one third of the city limits is located within a Special Flood Hazard Area (SFHA). This includes mostly residential homes but also the historic Front Street business district, steel mill, and port. The committee concluded that City needs include: improved stormwater infrastructure, more detailed flood mapping, citizen flood hazard & insurance education, increased floodzone building regulations, and hazard mitigation grants.

Flood Hazards

The City of Georgetown is exposed to multiple flood related hazards like hurricanes, tropical storms, storm surge, severe thunderstorms, and extreme high tides. Even a pop up rain shower can sometimes overload the aging storm drainage systems in the older areas, causing sporadic flooding to low lying streets and property. A few drainage projects with joint efforts by the City and South Carolina Department of Transportation (SCDOT) have helped the situation in the high traffic areas, but many other problematic residential areas still need to be addressed.

Flood Insurance Data

Flood insurance data for the City has increased in the past several years. The city has 521 active flood insurance policies in effect as of the date of this document. (See tables 2-1thru 2-3)

Table 2-1:

Percentage of Buildings Insured - City of Georgetown			
Flood Zone	**Policies**	**Properties**	**Percentage**
X	195	838	23.3%
AE	322	1,018	31.6%
VE	4	77	5.2%

Table 2-2:

Pre-FIRM Policies in Force			
Flood Zone	**Pre-FIRM**	**Premium**	**Insurance in Force**
X	109	$ 52,777	$ 31,932,700
AE	236	$ 328,906	$ 54,071,700
VE	1	$ 1,236	$ 74,300
Total:	346	$ 382,919	$ 86,078,700

Table 2-3:

Post-FIRM Policies in Force			
Flood Zone	**Pre-FIRM**	**Premium**	**Insurance in Force**
X	86	$ 45,518	$ 25,028,500
AE	86	$ 58,666	$ 26,738,900
VE	3	$ 6,575	$ 741,500
Total:	175	$ 110,759	$ 52,508,900

Pawleys Island

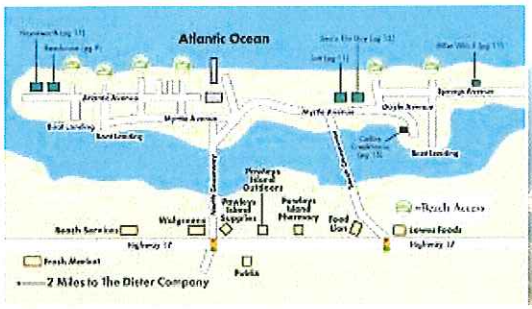

Pawleys Island is a small residential community that sits on a barrier island adjacent to the Atlantic Ocean. Only about 1 square mile in size and 115 permanent residents, this community mainly caters to its summer tourist season. Totally surrounded by marsh on one side and the ocean on the other, Pawleys Island is susceptible to many flooding issues. Most common are the monthly high tides and the storm surge potential from any category hurricane. The committee concluded that Pawleys Island's needs include: dune and shoreline protection, flood hazard & insurance education, and stricter building codes in V zone areas.

Flood Hazards

Pawleys Island is exposed to many of the same flood related hazards as the other communities like hurricanes, tropical storms, storm surge, severe thunderstorms, and high tides. But Pawleys Island also has a major problem with beach erosion. Like many beach front

communities, even less severe tropical storms can dramatically erode Pawleys Island's beaches and dunes, threatening beach front structures in the process.

Flood Insurance Data

Flood insurance is a very important issue for an island community. The insurance data for Pawleys Island can be found in tables (3-1 thru 3-3) below.

Table 3-1:

Percentage of Buildings Insured - Pawleys Island			
Flood Zone	**Policies**	**Properties**	**Percentage**
X	N/A	N/A	N/A
AE	188	477	62.3%
VE	339	389	38.3%

Table 3-2:

Pre-FIRM Policies in Force			
Flood Zone	**Pre-FIRM**	**Premium**	**Insurance in Force**
X	N/A	N/A	N/A
AE	208	$ 400,795	$ 56,361,100
VE	60	$ 339693	$ 17,266,700
Total:	268	$740,488	$ 73,627,800

Table 3-3:

Post-FIRM Policies in Force			
Flood Zone	**Pre-FIRM**	**Premium**	**Insurance in Force**
X	1	$ 2,929	$ 835,100
AE	89	$ 52,870	$ 28,365,000
VE	89	$ 488,584	$ 28,057,600
Total:	179	$ 544,383	$ 57,257,700

Comment [MJ2]: Column labeled as "Pre-FIRM" under Post-FIRM

Comment [MJ3]:

Comment [MJ4]:

Flood Insurance Assessment

The PPI Committee decided that a Flood Insurance Assessment of the insurance information was needed in order to evaluate the areas that may need to purchase flood insurance and/or gain additional insurance. The committee reviewed the flood insurance tables (Tables 1-3), which provide information on flood zone classification, insurance policies, insurance premiums, etc. The tables seem to show small percentages of property owners have coverage in our communities (other than the AE zones in Pawleys Island). The overall consensus was that everyone in the community needed to be aware of flood insurance, its cost, and the risk of not carrying it. We then made a combination table (Table 4 below) to show the overall average coverage for the separate communities.

Table 4:

Community	Policies in Force	Premium	Insurance in Force	Avg. Coverage
County	7,741	$ 7,477,628	$ 2,127,184,000	$ 274,794
City	521	$ 493,678	$ 138,587,600	$ 266,003
Pawleys Island	447	$ 1,284,871	$ 130,885,500	$ 292,809
Total:	8,709	$ 9,256,177	$ 2,396,657,100	$ 275,193

In review of Table 4, the committee felt that the average coverage for our communities was adequate compared to the housing stock in those respective flood zone areas. It seems to follow the pattern that properties on Pawleys Island need the most coverage, followed by the County, and then the City. The committee concluded that these numbers and percentages should go up in the next few years considering the following factors:

-recent increase in home values
-back to back years with a 1% annual flood (October 2015 & 2016)
-new FEMA Flood Insurance Rate Maps (FIRMs) coming out later this year

During the annual sub-committee evaluation and update meeting, staff will reassess the flood coverage and update the tables with new the new data every year.

Repetitive Loss Properties

The amount of Repetitive Loss (RL) properties seems to be related to the percentage of a community's property that lies within a flood zone. The City of Georgetown has 11 repetitive loss properties. This is down from 13 in the last ISO cycle visit, eliminating two in the past few years by demolition. Pawleys Island has 36 repetitive loss properties, which is a very low amount considering it is an island and beach front community. Georgetown County, on the other hand, has 94 RL properties, which is down from 120 when they first entered the CRS program. The vast expanse of unincorporated land in the County, and having multiple types of flooding hazards, means that more RL properties are inevitable. With new drainage projects in the works and strong CRS programs on the rise, all three jurisdictions hope to reduce, or at least minimize, their number of repetitive loss properties in the coming years.

Social and Economic Needs

The Georgetown area along South Carolina's coast is a diverse community. The City has a predominant African-American population, the County has an extensive retirement age population, and Pawleys Island is a seasonal based, family beach. The committee recommended that using communicational tools like the internet and social media are taking precedence in reaching these diverse groups, but vacationers and second home owners would still be better reached by mail.

Comment [MJ5]: While the internet and social media are great tools, we find that the older population don't utilize them as much or at all. I would recommend they be included in the mailing or some other form of outreach.

Target Audiences

After much discussion in the first and second meetings for the PPI Committee, the following key target audiences were selected:

Target Audience #1 - All properties located within a Special Flood Hazard Area (SFHA). The committee realizes that this is the target audience most at risk for flood hazards. After a community meeting with FEMA personnel on new flood maps in the area, we noticed that most residents didn't know what floodzone they were in or how to read a Flood Insurance Rate Map (FIRM). Increased awareness and flood insurance education could help mitigate flooding in these high risk areas.

Target Audience #2 - Real Estate Agents. One of the major careers that the committee discussed in needing education and awareness is in the licensed real estate community. These agents are the first line in communication when buying, selling, or even talking about a property, and the issues that revolve around flooding needs to be disclosed by them immediately. The downside to this flood hazard disclosure is the fact that this information could omit the sell. The committee agreed that something should be done on a regulation level by the Coastal Carolina Association of Realtors (CCAR).

Target Audience #3 - All Residents and Business Owners. When you live in the "low country" the threat from one of many flooding sources is inevitable. The jurisdictions cover all forms of flood hazards from riverine to storm surge. After an October 2015 major flooding event in our area, many people living outside the regulated flood zones suffered total losses from flooding. This spurred the government to push out the new flood maps that have been in the works for the past several years. The committee feels that outreach projects should be reaching everyone, even the people that are not currently located in a floodzone.

Target Audience #4 - Repetitive Loss Properties. Structures that flood frequently strain the National Flood Insurance Fund. The RL properties are the biggest draw on the Fund. FEMA has paid almost $3.6 billion in claims for RL properties. RL properties not only increase the NFIP's annual losses and the need for borrowing, but they drain the funds needed to prepare for catastrophic events. The committee concluded that these properties needed to be educated in mitigation techniques, and in some cases even helped, to find ways to protect their property.

Target Audience #5 - Insurance Agents and Financial Lenders. The Committee felt that another target audience is all the insurance agents and lenders around the community. We grouped these together because they have to work hand in hand. These professionals play a major role in flood premiums, insurance claims, home loans, etc. They need to know flood hazards and the effects of flooding in certain areas just as much as anyone. The local jurisdictions provide these agencies with abundant information on flooding and mitigation.

Target Audience #6 - Ocean Front Properties. If a tropical storm or hurricane ever hits the Georgetown area again, the ocean front properties will be directly affected the most due to storm surge. Any property on eastern side of the Limited to Moderate Wave Action (LiMWA)

line can, and will, be directly affected by these increases in tides and wave heights from storm surge. The addition of stricter building regulations, and extra protection like freeboards in the ordinance, can help these homeowners in the ocean front areas of Pawleys Island and Georgetown County by providing that extra protection for these structures.

Existing Public Information Efforts

All municipalities in this multi-jurisdictional plan have existing public information outreach projects that they work on annually. They mail out flood information on a yearly basis to insurance and real estate companies, as well also to repetitive loss areas. They also display flyers and flood mitigation material in multiple public places such as the county library, city hall, and the court house. The County, along with the City of Georgetown & Pawleys Island, have put on several workshops to inform the public about the new Flood Insurance Rate Maps (FIRMs) and how to mitigate their structures for future flooding events. The City of Georgetown even has its own radio station for information and emergency broadcasts in which the city records flood related messages. Other public information efforts are included in Table 5 below.

Table 5 Existing Public Information Outreach Projects

Community	Project	Subject Matter	Frequency
City of Georgetown Housing & Community Development Department	-City website	-Multiple flood related topics and mitigation information. Weekly news feeds in Facebook.	Year-round
	-Flood letters to property owners	-Letter includes flood related topics such as flood protection, mitigation, and insurance. Done once a year for both SFHA and X zones.	Semi-annually
	-Flyers & handouts	-FEMA and local flood related flyers.	Year-round
	-Electric & water bills	-Small one-liner info reminders on hurricanes and flood related issues.	Quarterly
	-Newspaper articles	-Article on floods in the local circulation.	Semi-annually
	-Public Outreach meetings	-Local public forums for new flood maps or flooding issues/flood insurance.	Semi-annually
	-Map inquiry service	-Answer questions on flood zones, hazards, insurance, and protection.	Year-round
	-WCOG radio ads	-Local radio messages read over radio to inform citizens on the hazards of flooding.	Quarterly
City Public Works Dept	-Stormwater & drainage cleaning	-Constant cleaning, repairs, and improvements to our stormwater drainage system and ditches.	Year-round
Keep GT Beautiful	-Riversweep	-Group event to remove trash and debris from the Sampit River and Winyah Bay area.	September
Georgetown County Building & Planning Department	-County Website	-Pre-firm and post firm flood maps available. Flood information on how to mitigate your home/property.	Year-round
	-Mailers to property owners	-Info on flood insurance, info on how to prepare for flood events goes out every year to property owners in SFHA.	Semi-annually
	-County news letter	-Flood related articles are posted several times a year.	Quarterly
	-County library	-They supply the library with all types of FEMA	Year-round

	-Public Outreach	info and handouts. -Public forums for new Flood Maps and how it will affect your home/property.	Annually
Pawleys Island Town Hall	-Town Website -Facebook & Twitter -Flood brochures -Mayor's Newsletter -Map inquiry service -Letter to property owners -Beach/Creek Sweep	-Various flood-related topics. -Various flood-related topics. -Available at Town Hall and mailed annually to every property owner. Supply copies to local realtors, insurance agents, and banks. -Flood insurance and mitigate flood damage. -Flood zone determination, flood insurance, flood protection, flood hazard mitigation. -Entire island considered an area of repetitive loss, flood insurance. -Volunteer event to clean up trash and debris from the beach tidal creeks.	Year-round Year-round Year-round Semi-annually Year-round Annually September
Georgetown County Library	-FIRM maps -Flood hazard information -Computer access (www)	-Flood Insurance Rate Maps for whole county. -Multiple books and guidelines on flooding hazards, mitigation, and insurance. -Gives anyone access to the endless information of flood related topics on web.	Year-round Year-round Year-round
Georgetown Chamber of Commerce	-Chamber website -Social Media -Disaster Planning Education workshop -Recovery from Disaster workshop	-Links to the community websites, hurricane information, and evacuation guide. -E-blasts to local businesses and the tourism market on status of event. -How businesses prepare for a weather disaster like flooding. -Class teaching businesses how to recover from a disaster like flooding.	Year-round Year-round Annually Annually
Red Cross Georgetown	-Blood drives	-Hold blood drives for local hospitals and shelters.	Year-round
Insurance Agencies	-Handouts & flyers	-Flood insurance including its benefits and protection.	Year-round
Local TV News Channels	-Website -Social Media -Mobile devices	-Multiple links and information on flood related topics and hurricanes. -Live messaging on flood warnings, river levels, hurricanes, and evacuation information. -Mobile alerts directly to phone when weather related event watches or warning occur.	Year-round Year-round Year-round

Flood Insurance Rate Map (FIRM)

Flood Insurance Rate Maps are the official maps of a community on which FEMA has delineated both special hazard areas and the risk premium zones applicable to the community. Georgetown County has FIRMs dated October 16, 1992. The City of Georgetown has been using the same FIRM's since March 16, 1989. All these FIRMs are extremely outdated considering it has been about 25 years since the last update. Add in several hurricanes, including Hugo and Matthew, and multiple flood events, like October 2015, and it can really change the topography of the Georgetown area. A new preliminary FIRM was released in January of 2016 but will not become effective until sometime in late 2017. These maps are much more accurate because they were developed using LiDAR technology. The new maps seem to be including more and more properties in the regulated flood zones.

Projects and Initiatives

The purpose of this Program for Public Information Plan is to educate the communities of Georgetown County and prepare them for flooding related events. The committee acknowledges the following key target audiences:

- Property owners located within a SFHA
- Real Estate agents
- All residents and business owners
- Repetitive Loss properties owners
- Insurance agents and financial lenders
- Ocean front property owners

With the target audiences in mind, the committee then came up with key messages that needed to be dispersed to the key audiences. The first six are the priority topics that must be covered, followed by additional messages the committee came up with. These messages are:

1. Know your flood hazard
2. Insure your property for your flood hazard
3. Protect people from the hazard
4. Protect your property from the hazard
5. Build responsibly
6. Protect natural floodplain functions
7. Know if you need flood insurance
8. What zone do you live in (AE or VE)
9. Flood insurance will cover up to $250,000
10. Home owners insurance does not cover losses from flooding

The strategy of the previous messages are to make citizens aware of flood hazards, flood mitigation techniques, and flood insurance in our communities. The target audiences are just a start in notifying the whole community about the hazards of flooding. The ongoing efforts that the local governments take to help increase the awareness of flooding should eventually reach all audiences throughout the entire County. Table 5 of this document provides a comprehensive list of the program elements, which includes various public information pieces, website information, public meetings on flooding, and more. Overall, including Georgetown County, City of Georgetown, and Pawleys Island, there are about 34 outreach projects and initiatives that will be implemented during the next year.

In addition to the existing outreach projects, the committee proposed new projects for the communities to work on that will help citizen awareness of flood related information. These projects can seen in Table 6, and are summarized by the committee below:

- While people in the SFHAs are receiving letters from their municipality, many of the people throughout the County that still have a danger from flooding do not. The community should put together a county-wide citizen email list that can send flood information out quickly and effectively.
- Elevation Certificates (ECs) are very important and homeowners should have and retain this documentation. This document helps the community know the elevation of their

land compared to the flood zones and helps insurance adjusters quote a premium for their flood insurance. The committee wanted to see a goal for the communities to get 20% of the flood zone properties to obtain ECs.

- Flood elevation signage is also a good tool in determining where the flood zones are located and what the high water mark for an area is. Although most think signage seems to be helpful, others, especially the real estate market, view this signage as a deterrent when it comes to buying or selling a property.
- Home owners insurance does not include losses from flooding. This is information that everyone needs to know, but only a few do. This message needs to be pushed on citizens both inside the flood zones and out.
- Many citizens throughout the County don't seem to know what flood zone they even live in. This information along with the mandatory purchase of flood insurance should be disclosed up front, starting with the real estate agent when buying or selling a home.
- Develop a better partnership with all jurisdictions to make communication between the County and its municipalities and its citizens more functional.

Flood Response Preparations

In addition to the projects that are implemented every year, the PPI committee recommends projects that will be implemented during and after a flood event. These projects are drafted and made ready for production and dissemination to all property owners and Spanish speaking citizens after a flood warning has been issued. Such projects are listed in Table 7 of this document. Use the following alphanumeric key for flood messages:

A. Homeowners insurance does not cover floods.
B. Turn around, don't drown!
C. Elevation is the only true way to mitigate from the hazard of flooding.
D. Know your zone.
E. Build back safer and stronger.

Annual Evaluation

The PPI Committee will meet at least once per year to evaluate the Plan and incorporate any needed revisions. The evaluation and review will cover:

- A review of the projects that were completed
- Progress towards the desired outcomes
- Recommendations for new projects to be added to the program
- Changes in target audiences and/or committee members

One of the multi-jurisdictional communities' staff members will draft the updates as changes are made by the committee. The revisions will be included in communities' annual recertification for the CRS.

Plan Adoption

This document will not be in effect until it is approved and adopted by Georgetown County Council, the City of Georgetown Council, and the Town of Pawleys Island Council.
Council Approval Dates:

Georgetown County	Date: 6/?/17
City of Georgetown	Date: 6/?/17
Town of Pawleys Island	Date: 6/?/17

Acronyms

FEMA: Federal Emergency Management Agency
AE Zone: 100 – year floodplain mapping by FEMA with base flood elevations
VE Zone: Coastal high hazard 100-year floodplain mapped by FEMA
X Shaded Zone: Areas of 500 year flood; areas of 100 year flood with average depths of less than 1 foot or with drainage areas less than 1 square mile
X Zone: Areas determined to be outside of the 500 year floodplain
EC: Elevation Certificate
CFM: Certified Floodplain Manager
CRS: Community Rating System
SFHA: Special Flood Hazard Area
NFIP: National Flood Insurance Program
OP: Outreach Projects
PPI: Program for Public Information
OCRM: Office of Ocean and Coastal Resource Management
FRP: Flood Response Preparation Projects
RL: Repetitive Loss
LiMWA: Limited to Moderate Wave Action
GTC: Georgetown County
CGT: City of Georgetown
PI: Pawleys Island

Contacts

Georgetown County - *Mike Young* - 843.545.3123
City of Georgetown - *Matthew Millwood* - 843.545.4016
Town of Pawleys Island - *Ryan Fabbri* - 843.237.1698